REV.

LERA LESLIE E. ROBERTSON ASSOCIATES, RLLP
CONSULTING STRUCTURAL ENGINEERS

P

DRAWING NO.

DRAFT

DESIGN

CHECK

WTC

DRAWING Book

D

Book D

Box 6

SKILLING, HELLE, CHRISTIANSEN, ROBERTSON Structural & Civil Engineers

PROJECT	TITLE	DATE
THE WORLD TRADE CENTER	DRAWING BOOK C - CAMPING UNIT	10/ 6/72

ISIONS

INTED 5/18/73

WTCI-43-LERA

D-AB0-	0	5/18/73
D-AB1-	1	9/15/71
D-AP1-	1.1	6/13/69
D-AB1-	1.2	6/13/69
D-AP1-	1.3	9/15/71
D-AP1-	2	3/18/69
D-AB1-	3	3/18/69
D-AB1-	4.1	3/18/69
D-AB1-	4.2	3/18/69
D-AP1-	4.3	3/18/69
D-AB1-	4.4	3/18/69
D-AP1-	4.5	3/18/69
D-AB1-	4.6	3/18/69
D-AB1-	5	3/18/69
D-AB1-	6	3/18/69
D-AB1-	7	3/18/69
D-AB1-	8	3/18/69
D-AB1-	9	3/18/69
D-AB1-	10	3/18/69
D-AB1-	11	8/29/69
D-AP1-	12	3/18/69
D-AB1-	13	3/18/69
D-AB1-	14.1	9/15/71
D-AP1-	14.2	9/15/71
D-AB2-	1	3/18/69
D-AB2-	1.3	8/10/70
D-AB2-	2	3/18/69
D-AB2-	3	3/18/69
D-AB2-	4	3/18/69
D-AB2-	5	3/18/69
D-AB2-	6	3/18/69
D-AB2-	7	3/18/69
D-AB3-	1	3/18/69
D-AB3-	2	3/18/69
D-AB3-	3	3/18/69
D-AB4-	1	3/18/69
D-AB4-	2	3/18/69
D-AB4-	3	3/18/69
D-AB4-	4	3/18/69
D-AB4-	5	3/18/69
DA-	1	8/29/69
DA-	2	8/29/69
DA-	3	5/21/70

LICENSED PROFESSIONAL ENGINEER LESLIE E. ROBERTSON No. 34360 THE STATE OF NEW YORK

D-AB0-0

SKILLING, HELLE, CHRISTIANSEN, ROBERTSON — Structural & Civil Engineers

PROJECT THE WORLD TRADE CENTER | TITLE DAMPING UNIT KEY PLAN - INDEX | DATE 3/18/69

REVISIONS

5/26/69

9/15/71

General Notes

Drawing Book D contains a summary of information required to assemble and install damping units and contains information relating to the bolting of floor trusses to the truss seats. Drawings in this book refer both to Tower A and to Tower B unless otherwise noted.

Damping units:

1) Damping units and damping unit extensions will be provided by others under contracts 221.00, 224.00 & 238.00. Type 'A' damping units shall be assembled to damping unit extensions under contract 230.00 in accordance with the provisions of shop drawings prepared under contract 221.00 and damping units and damping unit assemblies shall be installed within the buildings under contract 230.00.
2) Bolts and washers will be supplied under contract 234.00 and shall be installed under contract 230.00.
3) Type 'A' damping units shall be assembled, complete with fully torqued connecting bolts, prior to installation within the buildings.
4) Damping units and damping unit assemblies may not be installed prior to the placing of concrete floor slabs and certain perimeter air supply ducts, both immediatly adjacent to the units to be installed. The Engineer will work with the HVAC Subcontractor and will notify the Contractor under contract 230.00 as to the specified dates when damping units and damping unit assemblies may be installed.
5) Field welding under contract 230.00 shall be accomplished using E70xx electrodes or other equivolent, approved welding process.
6) Washer shall be used under both bolt head and nut at all locations with oversized or elongated holes in accordance with the requirements of FB1, FB2, and FB3.

Floor Truss Seats:

1) Bolts and washers for floor truss seats will be supplied under contract 234.00 and shall be installed under contract 230.00.

Index

D-AB1-1	General Notes & Index
D-AB1-1.1	Typical Shimming Details
D-AB1-1.2	" " "
D-AB1-1.3	Damping Unit Installation Procedure*
D-AB1-2	Floor 7
D-A1-3	Floor 9
D-A1-4.1	Floors 10-24, 26-40, 50-58, 60-74, 84-91, 93-106 Tower A
D-B1-4.2	Floors 10-24, 26-40, 50-58, 60-74, 84-91, 93-106, Tower B
D-B1-4.3	Floor 25, 59, 92
D-B1-4.4	Floor 10 & 12 Tower B
D-B1-4.5	Floor 11 Tower B
D-AB1-4.6	Floor 13 Tower B
D-A1-5	Floors 41-75
D-A1-6	Floor 43
D-AB1-7	Floor 44
D-AB1-8	Floor 45
D-AB1-9	Floors 46-49
D-AB1-10	Floor 77
D-AB1-11	Floor 78
D-AB1-12	Floor 79
D-AB1-13.	Floors 80-83
D-AB1-14.1	Floor 107 Tower A
D-AB1-14.2	Floor 107 Tower B
D-AB2-1	Damping unit details Type A1, A2, A3, A4
D-AB2-2	Damping unit detail Type A5
D-AB2-3	Damping unit details Type A6 & A7
D-AB2-4	Damping unit detail Type A8
D-AB2-5	Damping unit detail Type A9
D-AB2-6	Damping unit detail Type A10
D-AB2-7	Detail A20-A23
D-AB3-1	Damping unit details Type B1 & B2
D-AB3-2	Damping unit details Type B3 & B4
D-AB3-3	Damping unit details Type B5 & B6
DA-1	Damping unit - structural tees
DA-2	Damping unit - structural bars
DA-3	Viscoelastic damping unit
D-AB4-1	Core truss seat Key Plan
D-AB4-2	Core truss seat Schedule
D-AB4-3	Core truss seat Schedule
D-AB4-4	Core truss seat Schedule
D-AB4-5	Core truss seat Schedule

Shims

1) Shims shall be supplied and installed under contract 230.00. Shim material to be ASTM A245 Grade D.

* formally numbered D-AB2-1.3

LICENSED PROFESSIONAL ENGINEER — LESLIE E. ROBERTSON — No. 34360 — UNIVERSITY OF THE STATE OF NEW YORK

DESIGNED S. Kaup

DRAWN J. Adams, F. Smith

REVIEWED [illegible]

D-AB1-1

SKILLING, HELLE, CHRISTIANSEN, ROBERTSON — Structural & Civil Engineers

PROJECT THE WORLD TRADE CENTER | TITLE TYPICAL SHIMMING DETAILS | DATE 5-26-69

REVISIONS

6/13/69

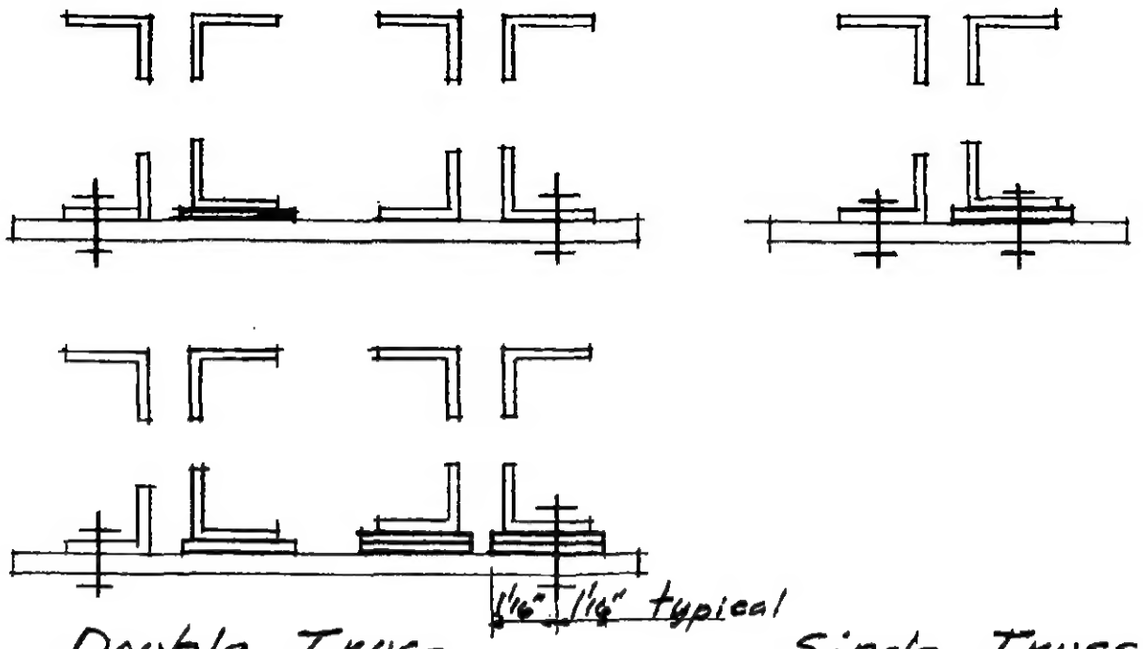

Double Truss — Single Truss

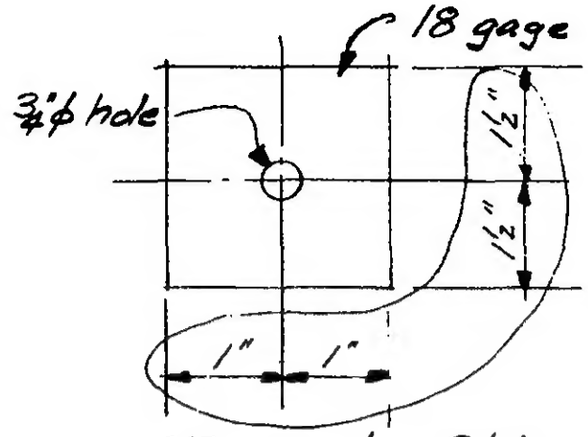

Typical Shim

Typical shim details - Truss seats - Type "A"

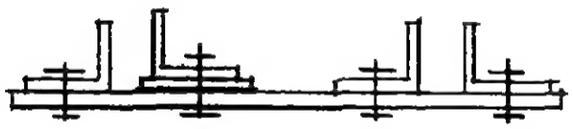

Type A5

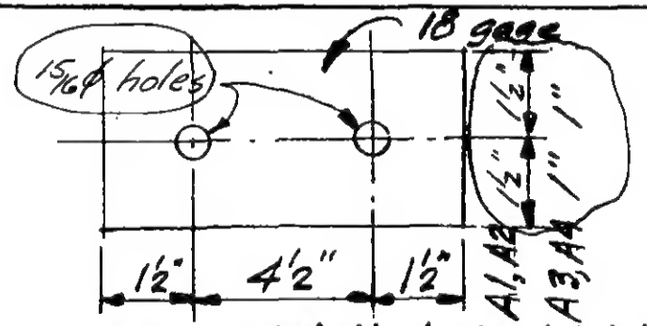

Shim detail A1, A2, A3, A4

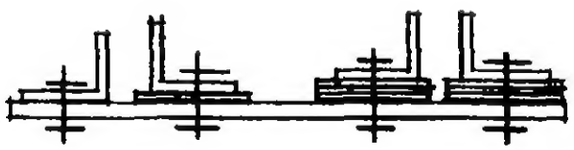

Type A1, A2, A3, A4

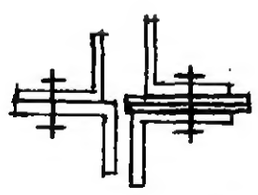

Type A6, A7

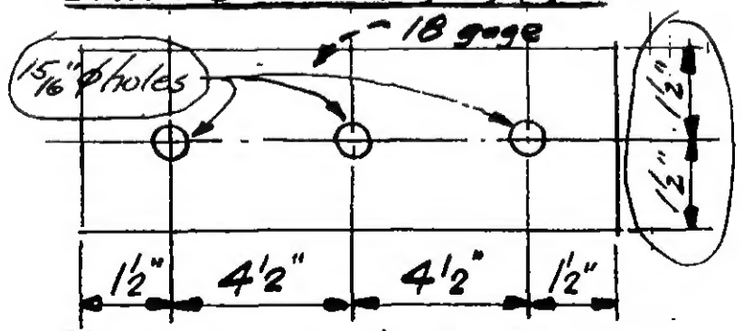

Shim detail A5, A6, A7

Typical shim details - DSU units to bottom chord of truss - Type A1-A7

LICENSED PROFESSIONAL ENGINEER
LESLIE E. ROBERTSON
No. 34360
UNIVERSITY OF THE STATE OF NEW YORK

DESIGNED

DRAWN

REVIEWED

D-AB1-1.1

SKILLING, HELLE, CHRISTIANSEN, ROBERTSON — Structural & Civil Engineers

PROJECT THE WORLD TRADE CENTER | TITLE TYPICAL SHIMMING DETAILS | DATE 5-26-69

REVISIONS

6/13/69

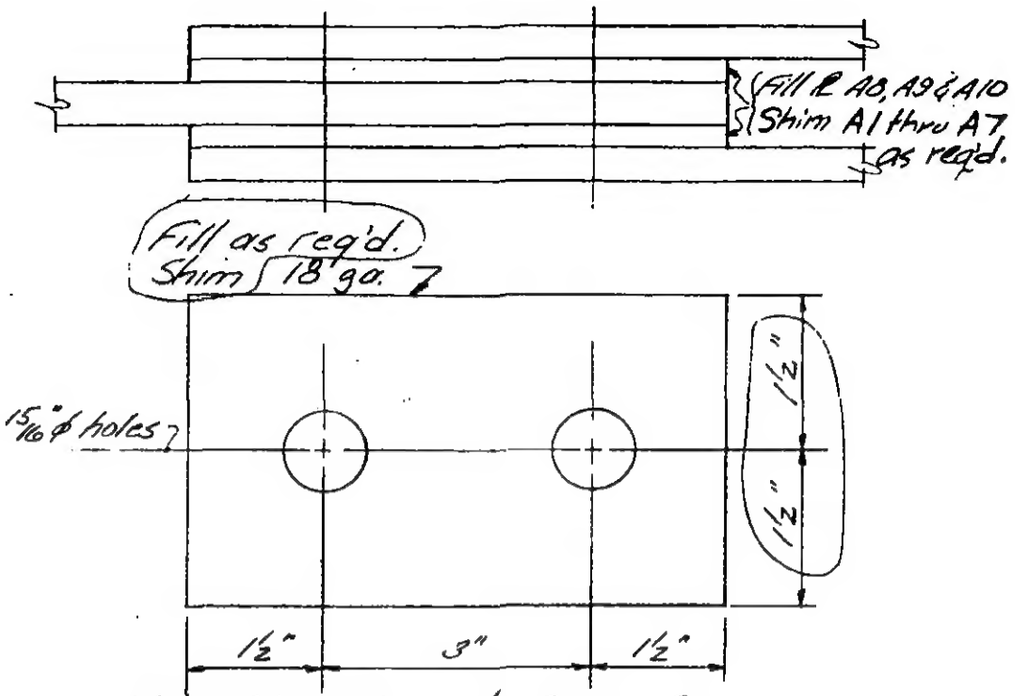

TYPICAL SHIM & FILL R DETAIL

Type A damping unit to DSU damping unit extension

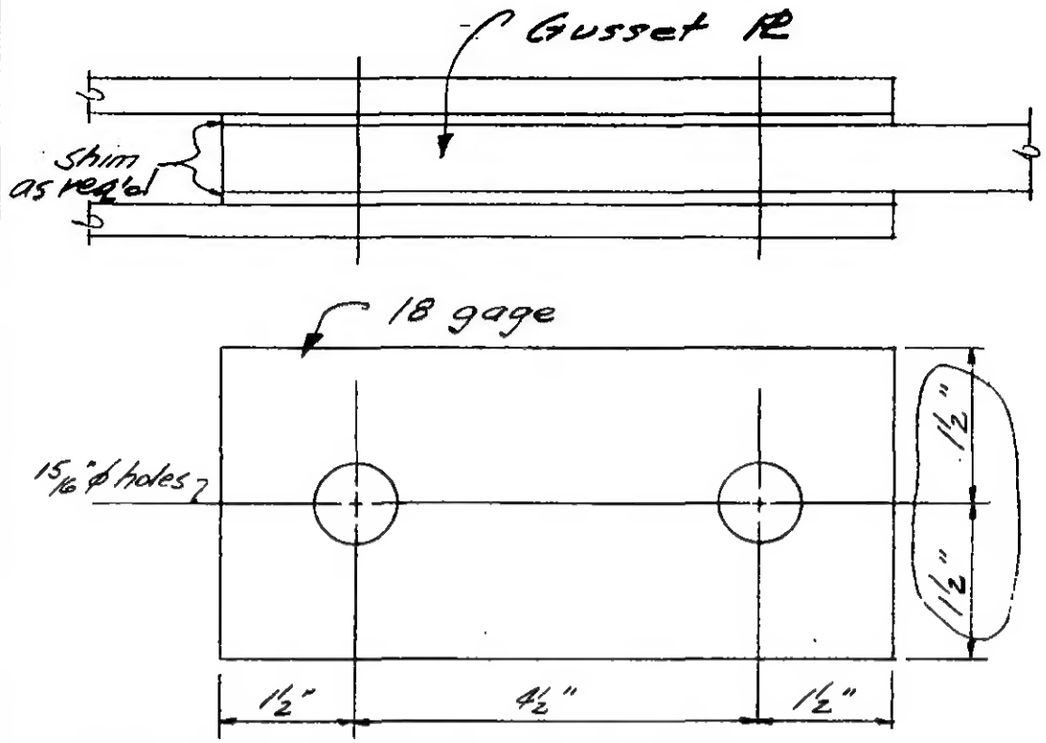

TYPICAL SHIM DETAIL

Type A8, A9 & A10 - DSU damping unit extension to truss

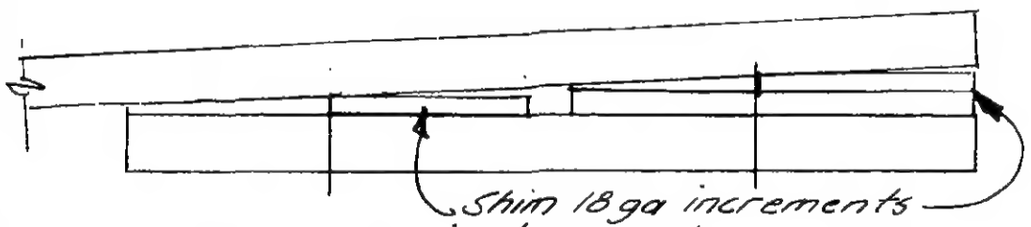

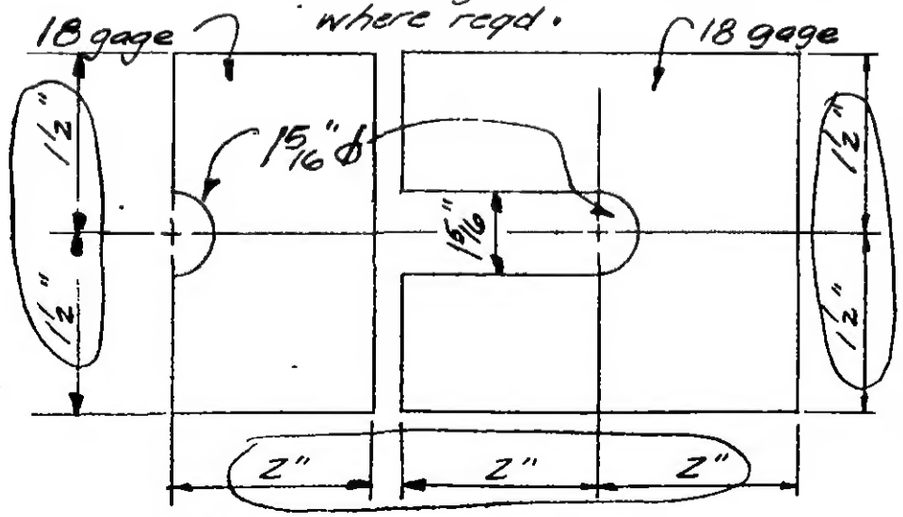

TYPICAL SHIM DETAIL

Detail B1, B2, B3, B4, B5, B6 at interior end of damper

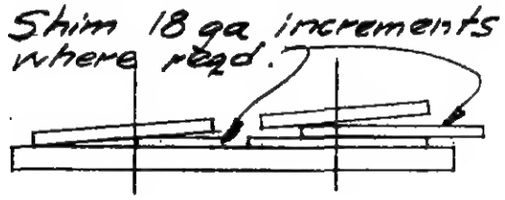

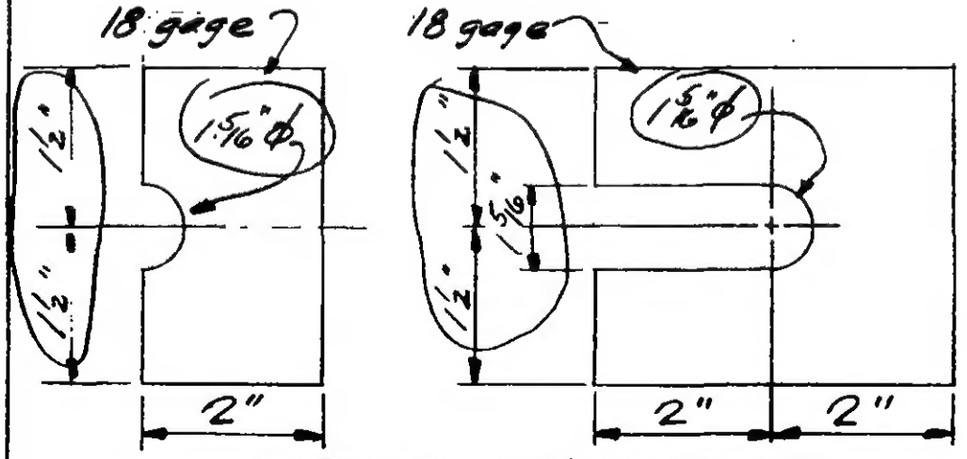

TYPICAL SHIM DETAIL

Damping units Type A & B at exterior wall seat

LICENSED PROFESSIONAL ENGINEER — LESLIE E. ROBERTSON — No. 34360 — UNIVERSITY OF THE STATE OF NEW YORK

DESIGNED

DRAWN J. Adams

REVIEWED

D-AB1-1.2

SKILLING, HELLE, CHRISTIANSEN, ROBERTSON — Structural & Civil Engineers

PROJECT THE WORLD TRADE CENTER | TITLE DAMPING UNIT INSTALLATION PROCEDURE (A1-A7) | DATE 8-10-70

REVISIONS

9-15-71

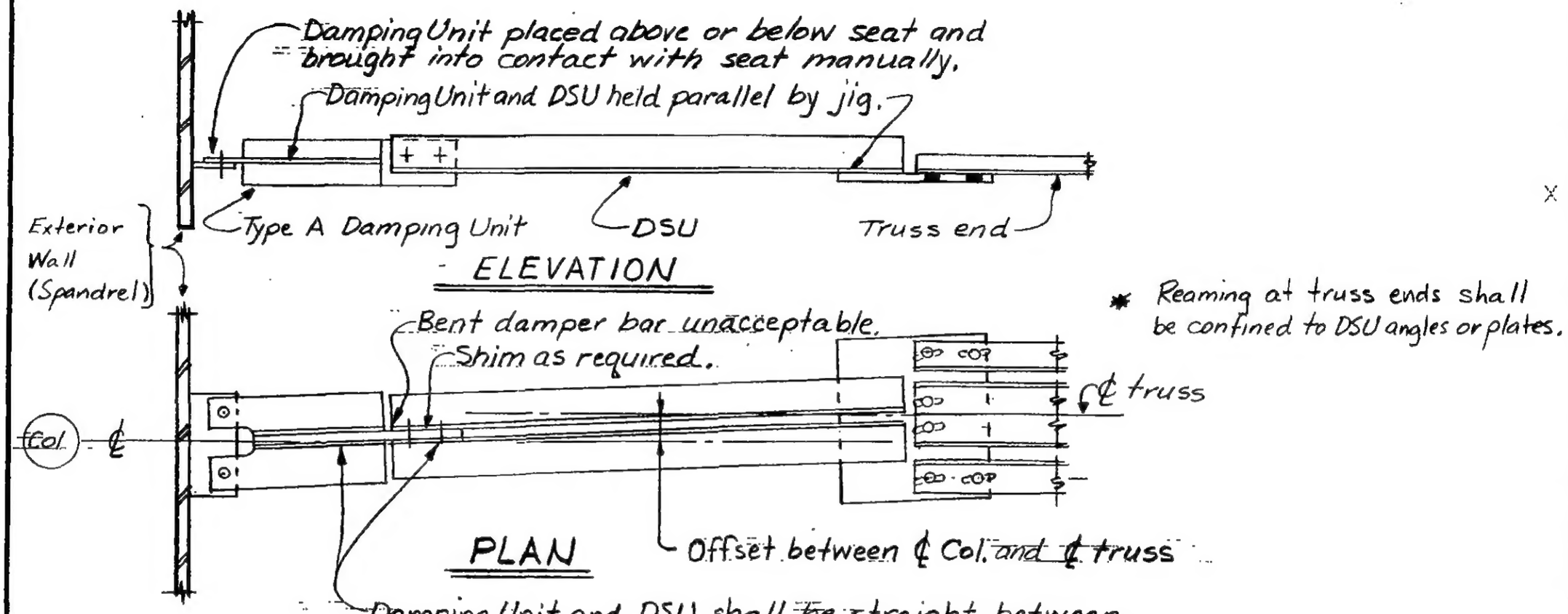

✱ Reaming at truss ends shall be confined to DSU angles or plates.

DAMPING UNIT INSTALLATION PROCEDURE
(Details A1 through A7 inclusive)

1. Assemble Type A damping unit to corresponding DSU unit maintaining web of damping unit parallel to outstanding leg of DSU assembly. Provide one or more 18 gage shims (see Drawing D-AB1-1.2) as required to limit slack distance between faying surfaces of A325 friction connection to less than 1/16 inch. Torque 7/8 inch A325 bolts using turn-of-nut method. Provide A325 hardened washer under turned element.
2. Align damping unit - DSU assembly horizontally in a straight line from truss end to exterior wall seat with truss end bolts (A325 for A1, A2 and A6; A490 for A3, A4, A5, and A7) finger tight but shimmed in accord with Drawing D-AB1-1.1.
   ✱ Light reaming to achieve alignment will be permitted by Surveillance Engineer where necessary to achieve correct alignment.
3. Place damping unit in contact with upper or lower face of exterior wall seat, whichever gives the best alignment. Where damping unit does not rest on seat, unit may be seated by one man manually pushing unit into contact with the seat. Install A490 bolts with A325 hardened washers at bolt head and nut. Provide shims in accord with Drawing D-AB1-1.2. Shims will generally be required only to correct for twist between damping unit web extensions and exterior wall seat.
4. Wrench tighten all bolts connecting truss end to DSU and between damping unit webs and exterior seat. Tighten all bolts by turn-of-nut method. Bolt tightness will be checked at random by an inspecting wrench in accord with paragraph 6(c) of "Specification for Structural Joints Using ASTM A325 or A490 Bolts."
5. In those cases where manual force will not seat damping units, sufficient shims shall be installed at truss end connection to allow damping unit to seat.
6. All damping units in which the included plate is permanently bent during installation shall be removed and replaced.
7. All damping units which, in the erected position, show a rotational or vertical displacement of the included bar with respect to the tees shall be removed and replaced where directed by the Surveillance Engineer.

DESIGNED EJW
DRAWN EJW
REVIEWED

D-AB1-1.3

SKILLING, HELLE, CHRISTIANSEN, ROBERTSON — Structural & Civil Engineers

PROJECT: THE WORLD TRADE CENTER | TITLE: DAMPING UNIT INSTALLATION PROCEDURE (A1-A7) | DATE: 8-10-70

REVISIONS

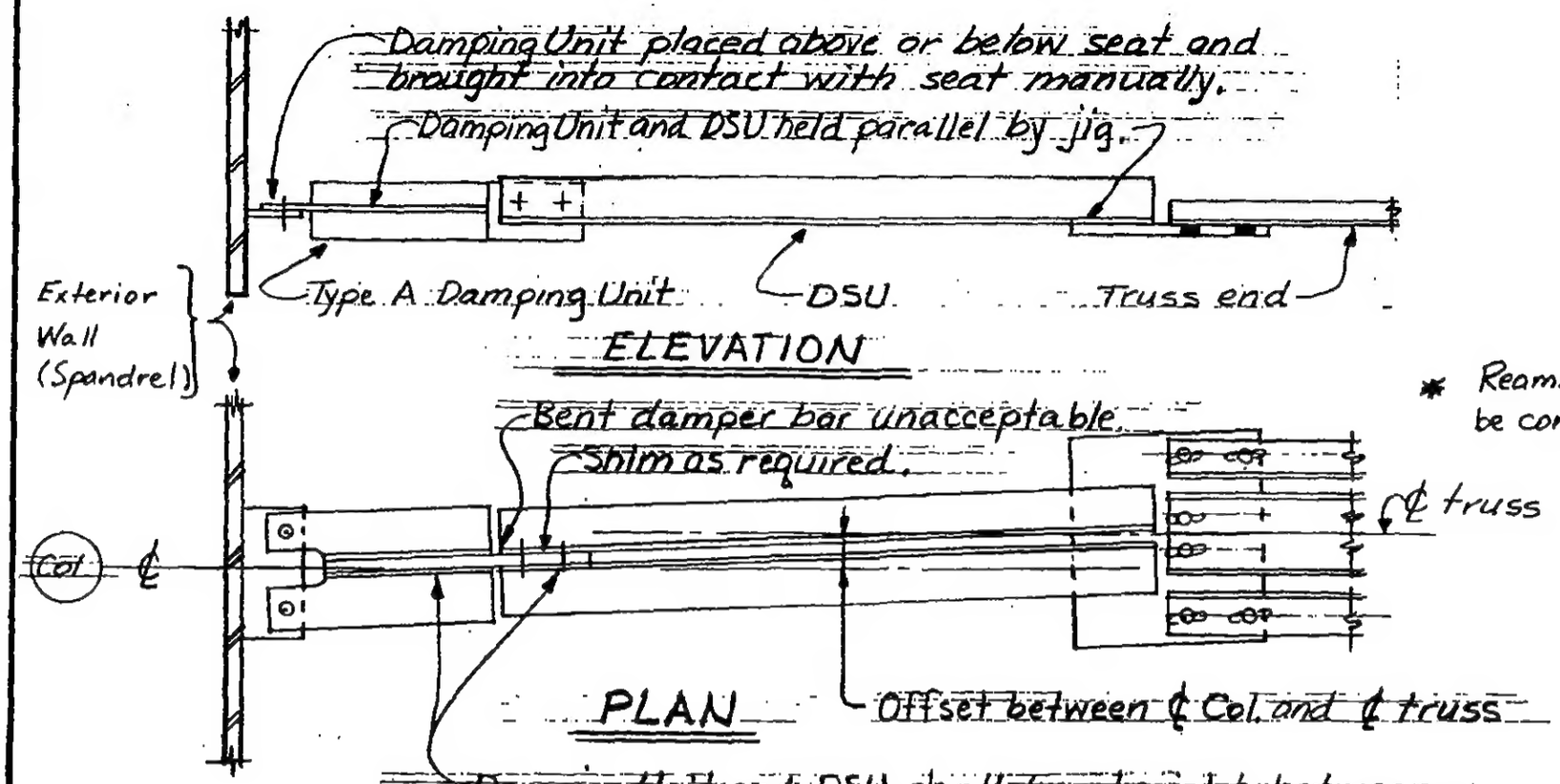

* Reaming at truss ends shall be confined to DSU angles or plates.

Damping Unit and DSU shall ~~be~~ straight between truss end and column seat.

DAMPING UNIT INSTALLATION PROCEDURE
(Details A1 through A7 inclusive)

1. Assemble Type A damping unit to corresponding DSU unit maintaining web of damping unit parallel to outstanding leg of DSU assembly. Provide one or more 18 gage shims (see Drawing D-AB1-1.2) as required to limit slack distance between faying surfaces of A325 friction connection to less than 1/16 inch. Torque 7/8 inch A325 bolts using turn-of-nut method. Provide A325 hardened washer under turned element.
2. Align damping unit - DSU assembly horizontally in a straight line from truss end to exterior wall seat with truss end bolts (A325 for A1, A2 and A6; A490 for A3, A4, A5, and A7) finger tight but shimmed in accord with Drawing D-AB1-1.1.
   * Light reaming to achieve alignment will be permitted by Surveillance Engineer where necessary to achieve correct alignment.
3. Place damping unit in contact with upper or lower face of exterior wall seat, whichever gives the best alignment. Where damping unit does not rest on seat, unit may be seated by one man manually pushing unit into contact with the seat. Install A490 bolts with A325 hardened washers at bolt head and nut. Provide shims in accord with Drawing D-AB1-1.2. Shims will generally be required only to correct for twist between damping unit web extensions and exterior wall seat.
4. Wrench tighten all bolts connecting truss end to DSU and between damping unit webs and exterior seat. Tighten all bolts by turn-of-nut method. Bolt tightness will be checked at random by an inspecting wrench in accord with paragraph 6(c) of "Specification for Structural Joints Using ASTM A325 or A490 Bolts."
5. In those cases where manual force will not seat damping units, sufficient shims shall be installed at truss end connection to allow damping unit to seat.
6. All damping units in which the included plate is permanently bent during installation shall be removed and replaced.
7. All damping units which, in the erected position, show a rotational or vertical displacement of the included bar with respect to the tees shall be removed and replaced where directed by the Surveillance Engineer.

DESIGNED EJW
DRAWN EJW
REVIEWED

D-AB2-1.3

SKILLING, HELLE, CHRISTIANSEN, ROBERTSON — Structural & Civil Engineers

PROJECT: THE WORLD TRADE CENTER

TITLE: DAMPING UNIT KEY PLAN - FLOOR 7

DATE: 5/18/69

REVISIONS

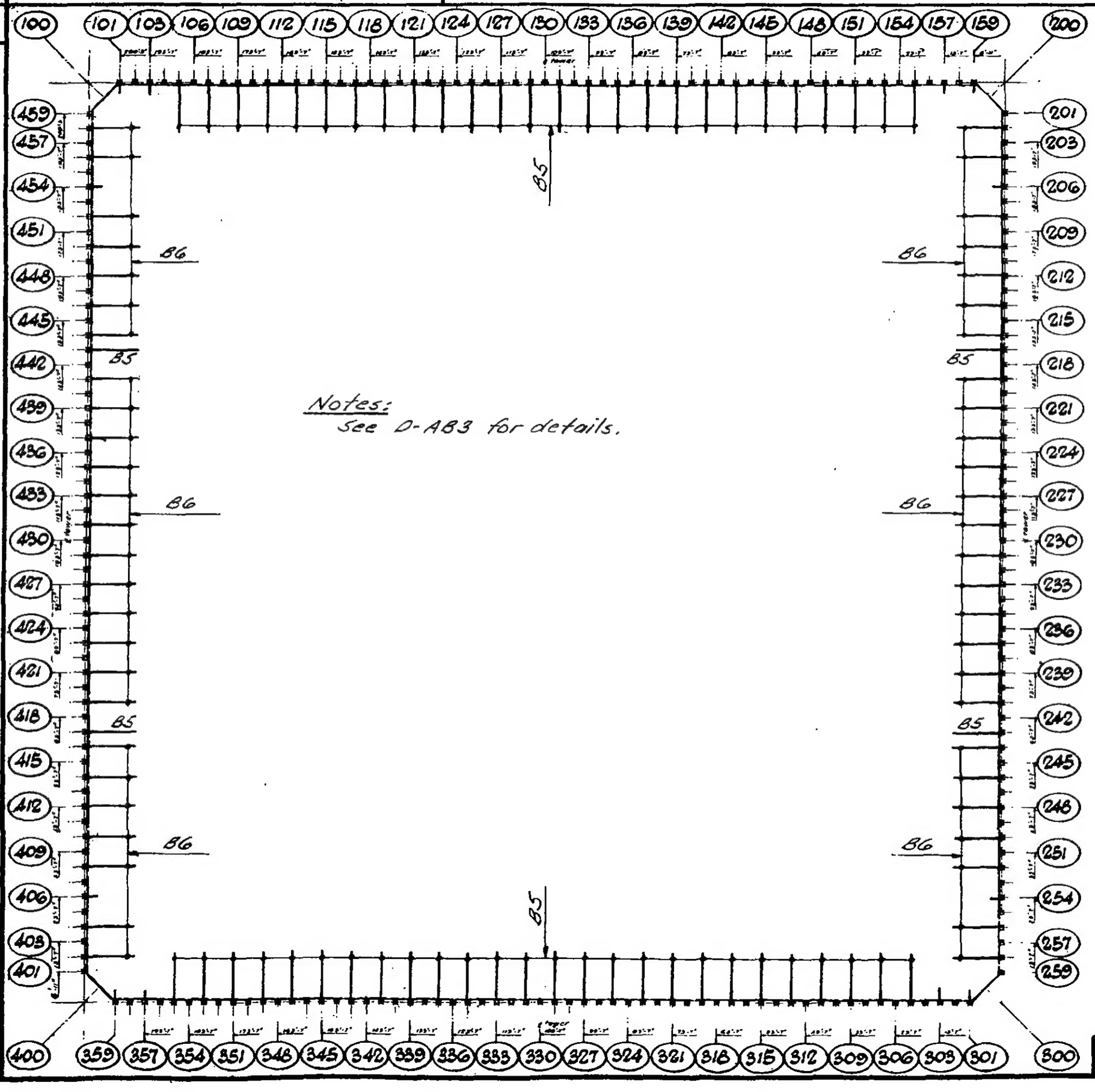

NORTH

TOWER A

NORTH

TOWER B

Notes:
See O-AB3 for details.

PER FLOOR	
No.	Type
56	B5
52	B6

DESIGNED: S. Karp

DRAWN: J. Adams

REVIEWED: H. Brewer

O-AB1-2

SKILLING, HELLE, CHRISTIANSEN, ROBERTSON — Structural & Civil Engineers

PROJECT: THE WORLD TRADE CENTER

TITLE: DAMPING UNIT KEY PLAN - FLOOR 9

DATE: 3/18/69

REVISIONS

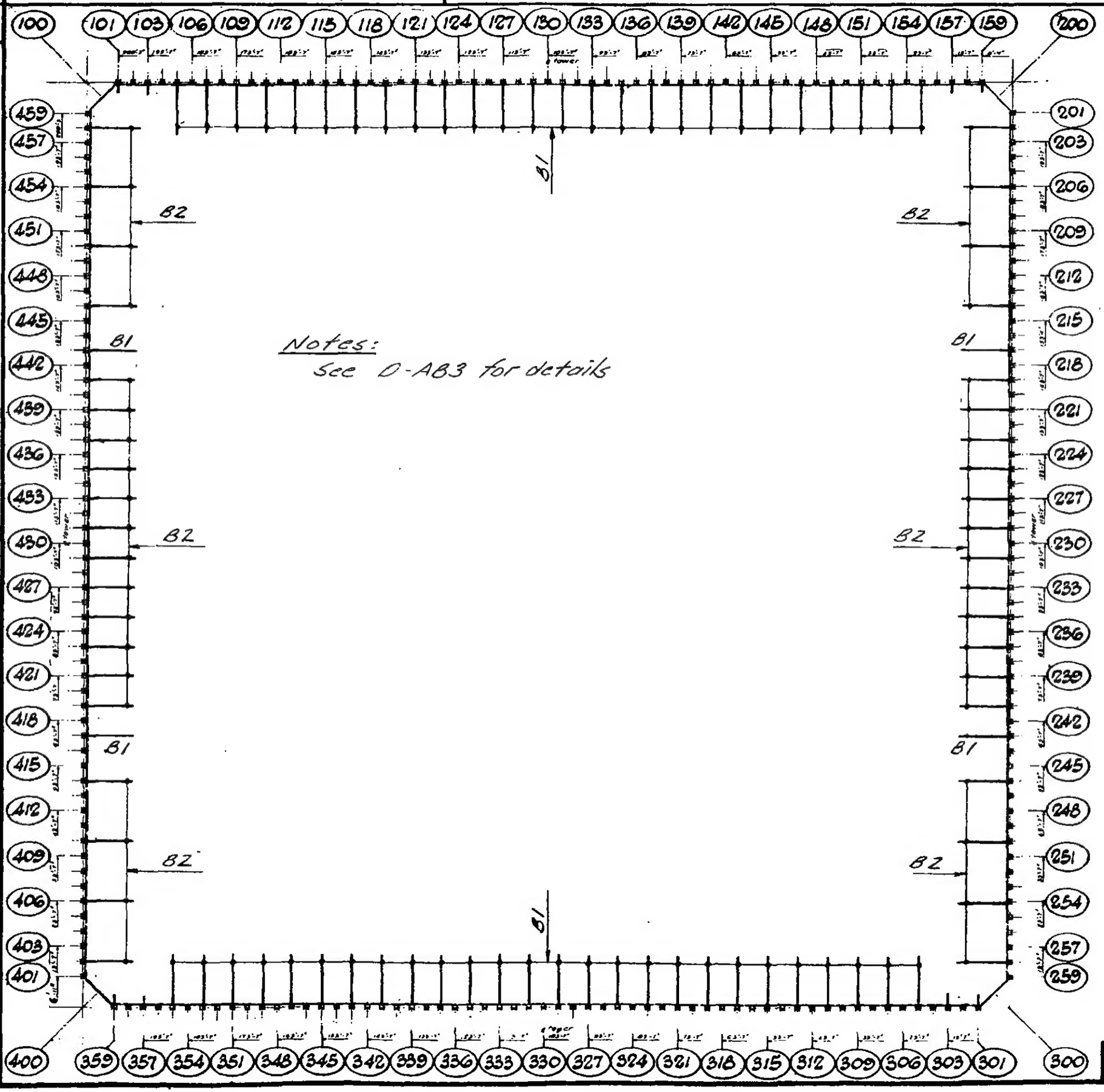

NORTH

TOWER A

NORTH

TOWER B

PER FLOOR	
No.	Type
56	B1
40	B2

DESIGNED: S. Karp

DRAWN: J. Adams

REVIEWED: W. Brewer

O-AB1-3

SKILLING, HELLE, CHRISTIANSEN, ROBERTSON — Structural & Civil Engineers

PROJECT: THE WORLD TRADE CENTER

TITLE: DAMPING UNIT KEY PLAN - FLOORS (SEE TABLE) TOWER A

DATE: 3/18/69

REVISIONS

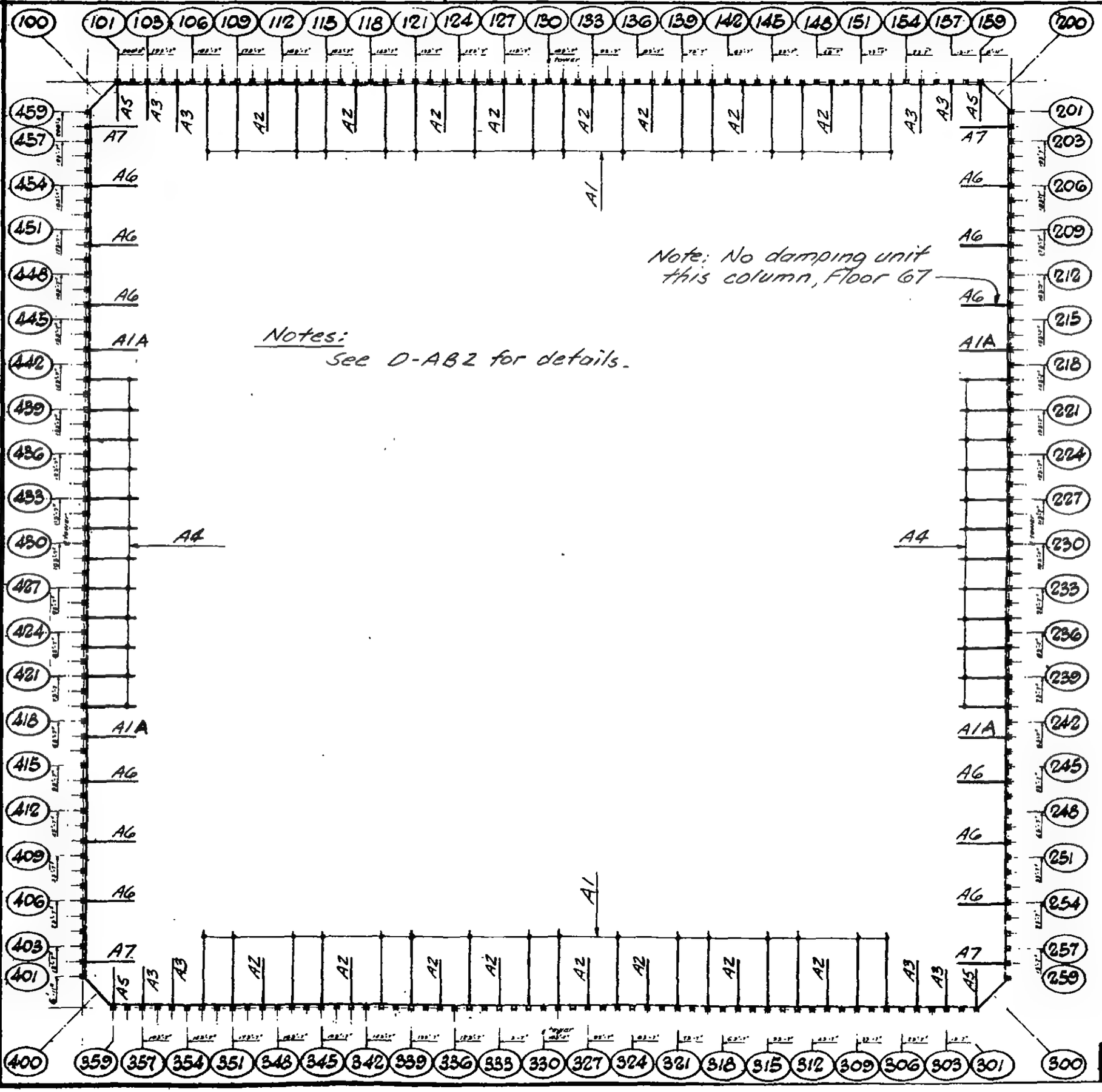

FLOORS INCLUDED
10-24
26-40
50-58
60-74
84-91
93-106

PER FLOOR	
No.	Type
36	A1 (2)
16	A2
8	A3
24	A4
4	A5
10 (1) 12	A6
4	A7

(1) 11 Floor 67
(2) Incl. 4 - A1A

DESIGNED: Kap
DRAWN: J. Adams
REVIEWED: W. Brewer

D-AB1-4.1

SKILLING, HELLE, CHRISTIANSEN, ROBERTSON — Structural & Civil Engineers

PROJECT: THE WORLD TRADE CENTER

TITLE: DAMPING UNIT KEY PLAN - FLOORS (SEE TABLE) TOWER B

DATE: 3/18/69

REVISIONS

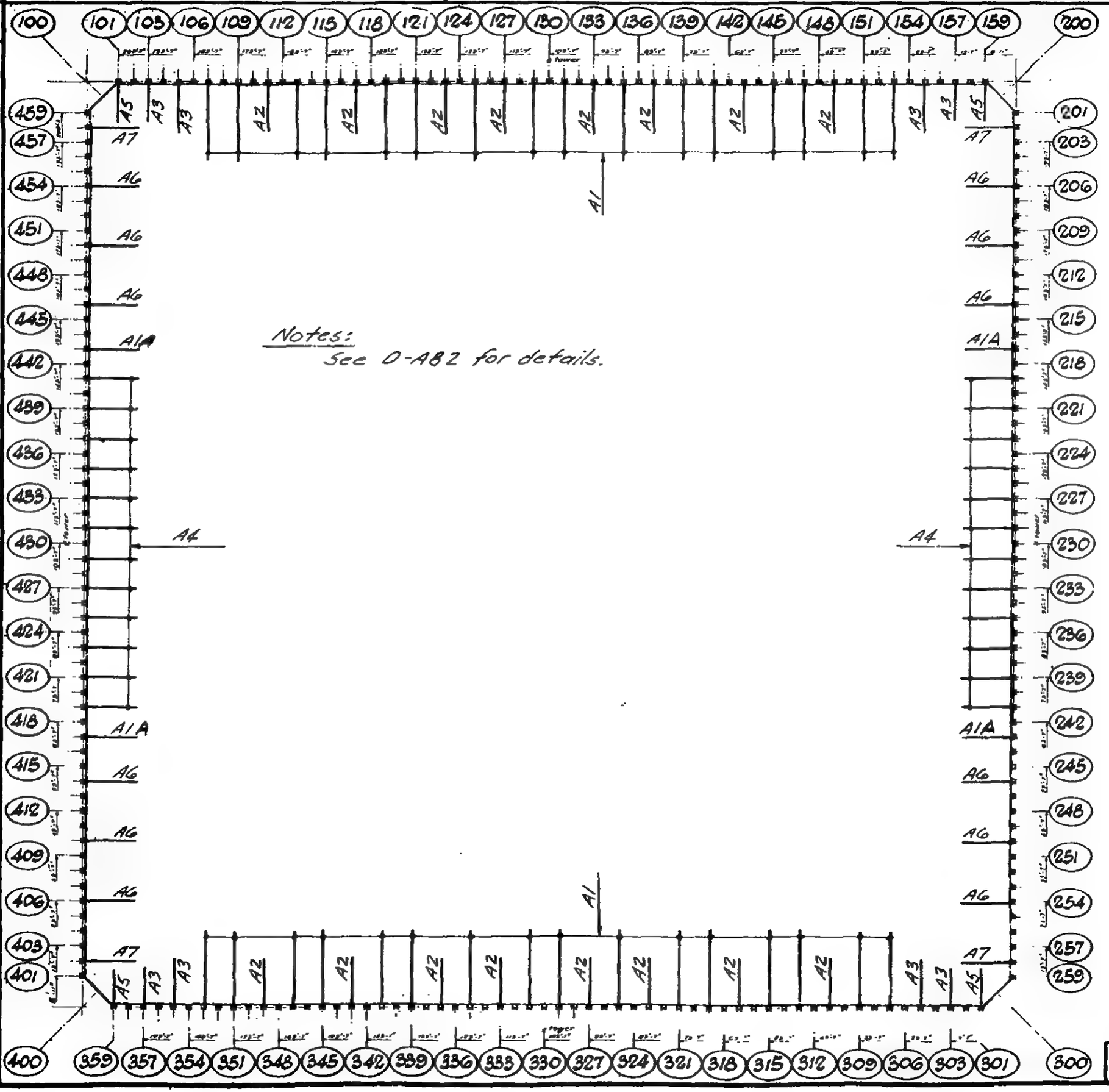

Notes:
See O-AB2 for details.

FLOORS INCLUDED
14-24
26-40
50-58
60-74
84-91
93-106

PER FLOOR	
No.	Type
36	A1(1)
16	A2
8	A3
24	A4
4	A5
12	A6
4	A7

(1) Incl. 4. A1A

DESIGNED: Kap
DRAWN: J. Adams
REVIEWED: W. Brewer

O-AB1-4.2

SKILLING, HELLE, CHRISTIANSEN, ROBERTSON — Structural & Civil Engineers

PROJECT: THE WORLD TRADE CENTER | TITLE: KEY PLAN - FLOORS 25, 59, 92 | DATE: 3/18/69

REVISIONS

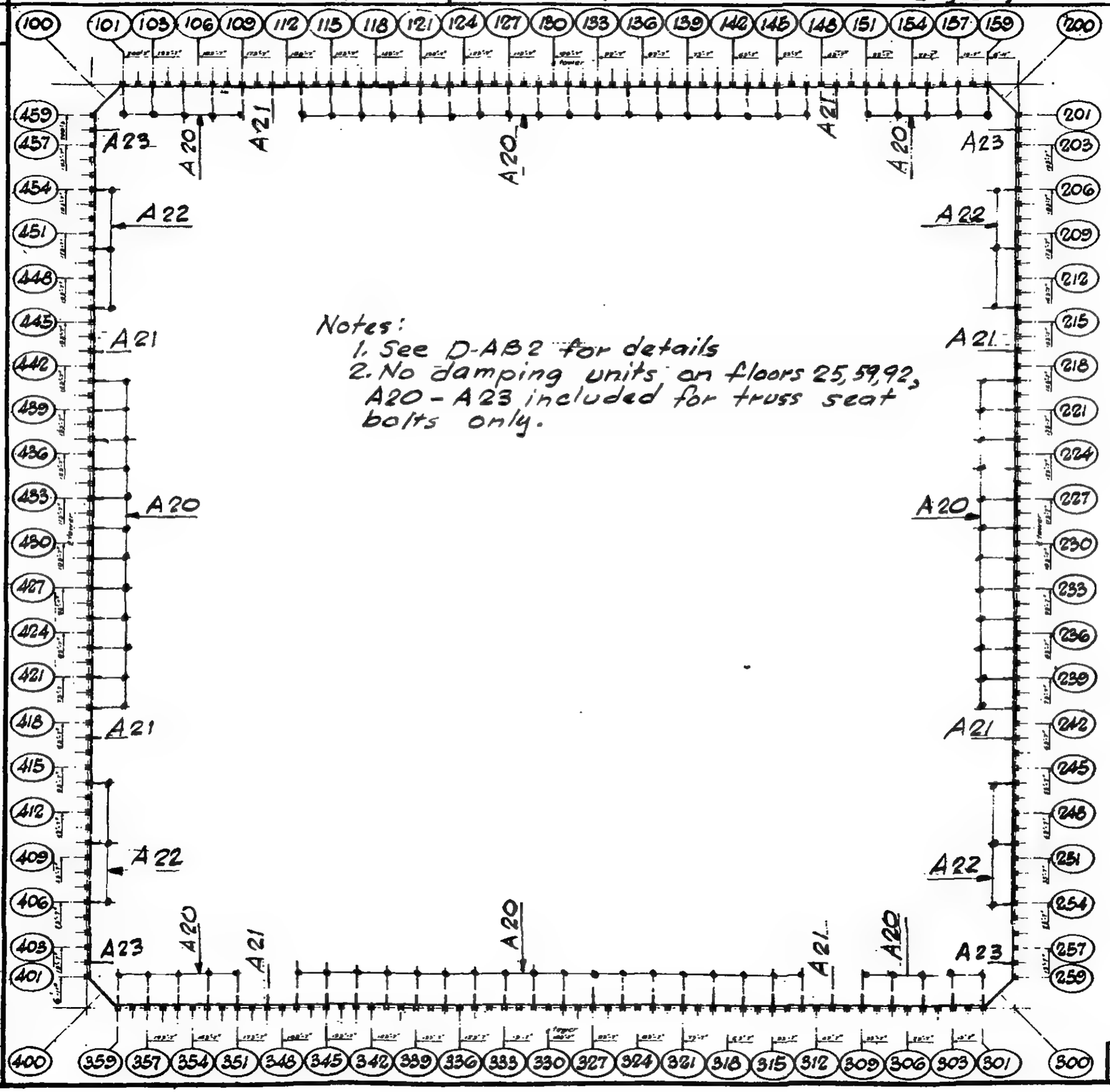

Notes:
1. See D-AB2 for details
2. No damping units on floors 25, 59, 92, A20 - A23 included for truss seat bolts only.

PER FLOOR	
No.	Type
80	A20
8	A21
12	A22
4	A23

DESIGNED

DRAWN

REVIEWED W. Brewer

D-AB1-4.3

SKILLING, HELLE, CHRISTIANSEN, ROBERTSON — Structural & Civil Engineers

PROJECT: THE WORLD TRADE CENTER | TITLE: DAMPING UNIT KEY PLAN - FLOOR 10 & 12 TOWER B | DATE: 5/18/69

REVISIONS

7-9-71

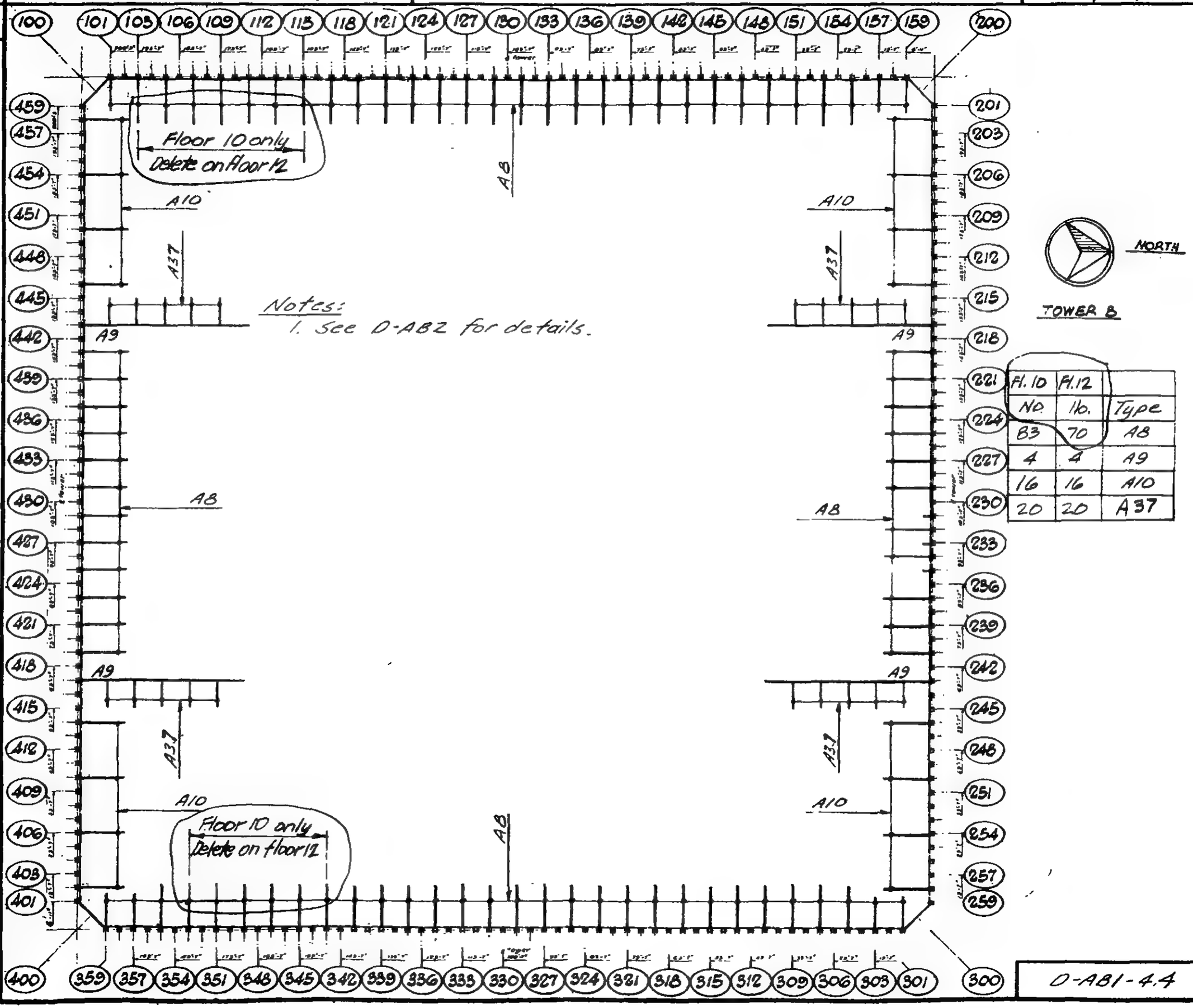

Fl. 10 No.	Fl. 12 No.	Type
B3	70	A8
4	4	A9
16	16	A10
20	20	A37

DESIGNED: F. Kano
DRAWN: J. Adams
REVIEWED: W. Brewer

0-AB1-4.4

SKILLING, HELLE, CHRISTIANSEN, ROBERTSON — Structural & Civil Engineers

PROJECT: THE WORLD TRADE CENTER

TITLE: DAMPING UNIT KEY PLAN - FLOOR 11 TOWER B

DATE: 3/18/69

REVISIONS

7-9-71

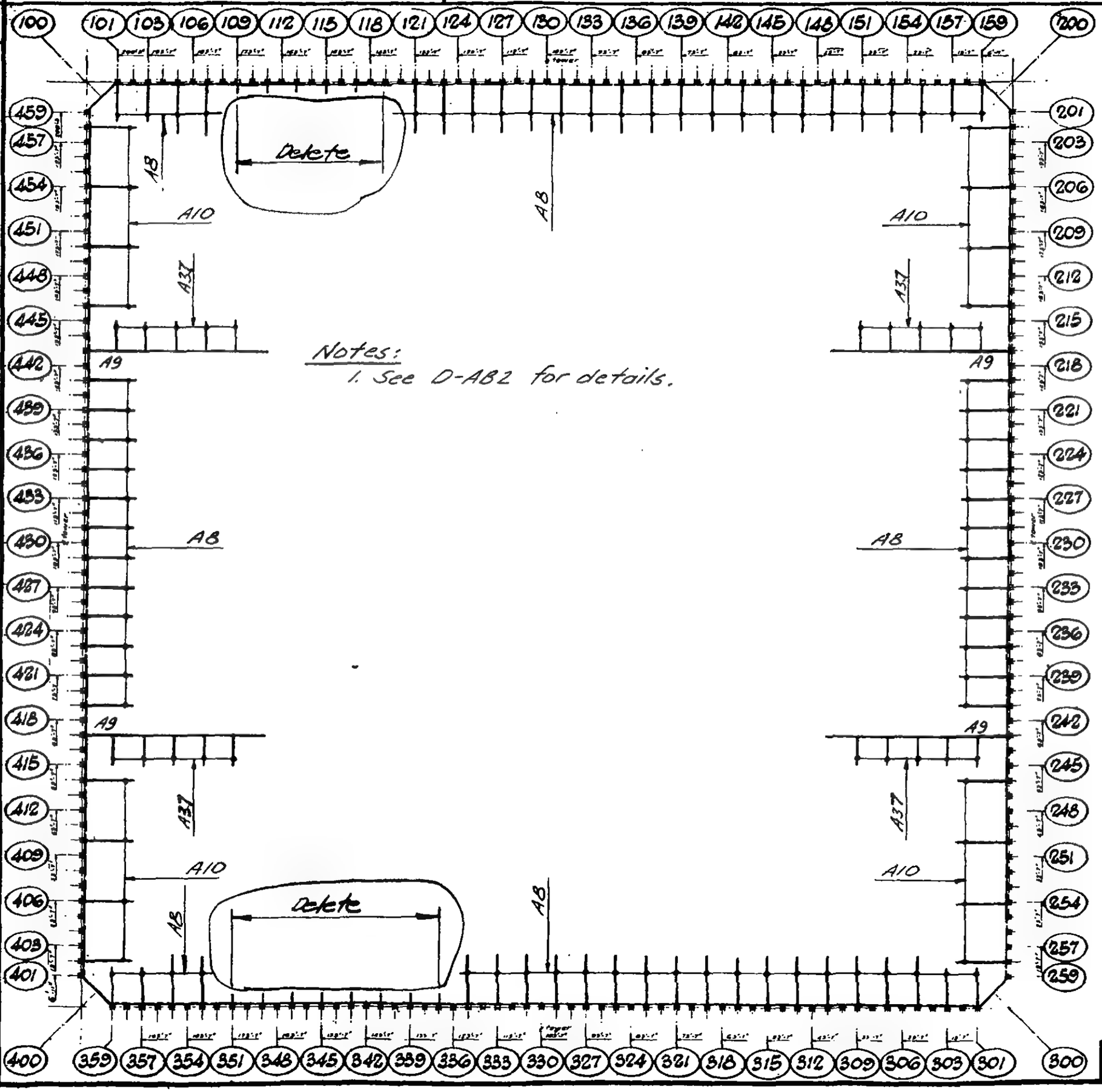

Notes:
1. See O-AB2 for details.

PER FLOOR	
No.	Type
70	A8
4	A9
16	A10
20	A37

DESIGNED: Kap

DRAWN: J. Adams

REVIEWED: W. Brower

O-AB1-4.5

SKILLING, HELLE, CHRISTIANSEN, ROBERTSON — Structural & Civil Engineers

PROJECT: THE WORLD TRADE CENTER

TITLE: DAMPING UNIT KEY PLAN - FLOOR 13 TOWER B

DATE: 3/18/69

REVISIONS

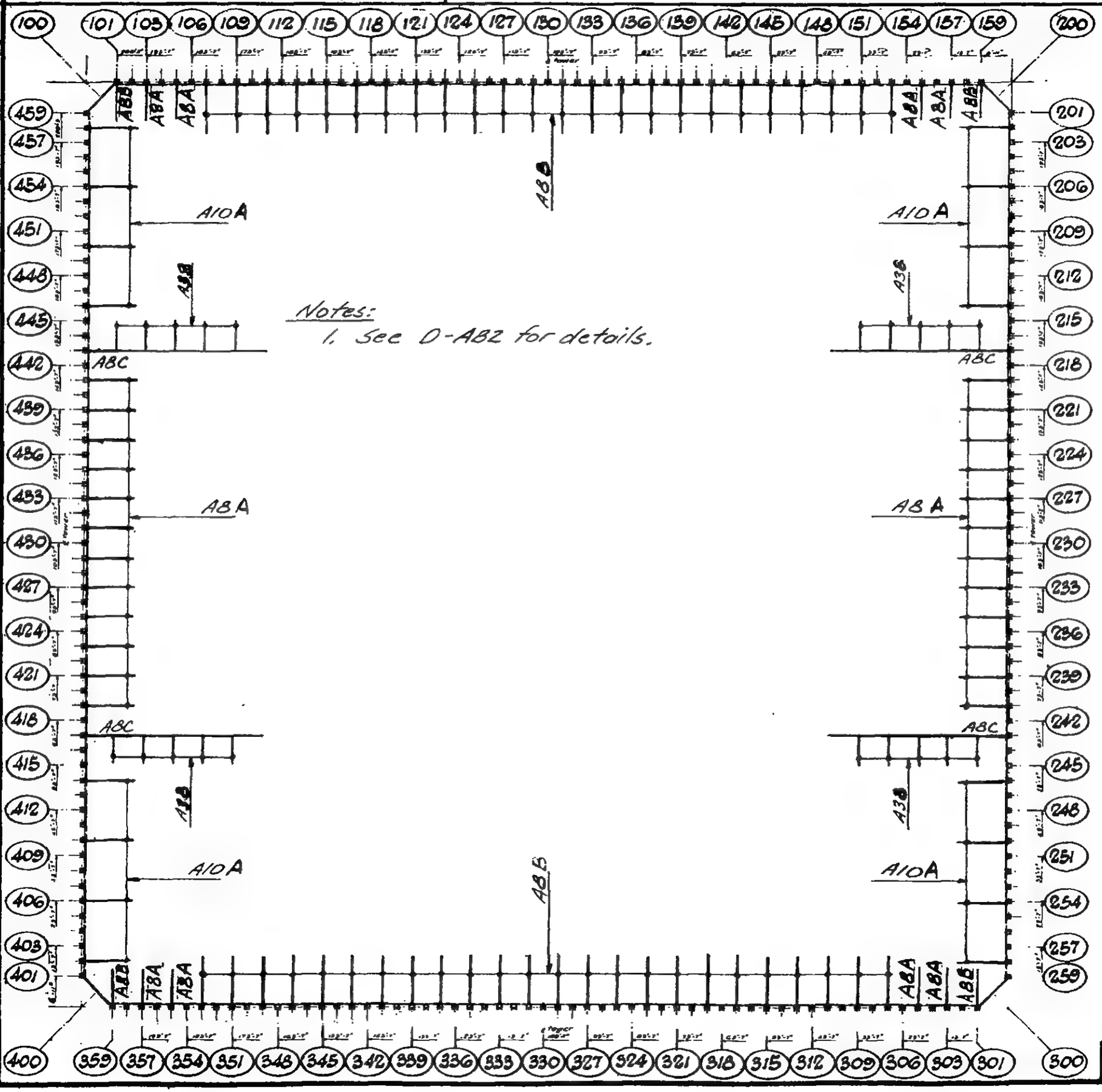

Notes:
1. See O-AB2 for details.

NORTH

TOWER B

PER FLOOR	
No.	Type
88	A8
16	A10
20	A38

DESIGNED: E. Karp

DRAWN: J. Adams

REVIEWED: W. Brewer

O-AB1-4.6

SKILLING, HELLE, CHRISTIANSEN, ROBERTSON — Structural & Civil Engineers

PROJECT: THE WORLD TRADE CENTER

TITLE: DAMPING UNIT KEY PLAN - FLOORS 41, 75

DATE: 3/18/69

REVISIONS

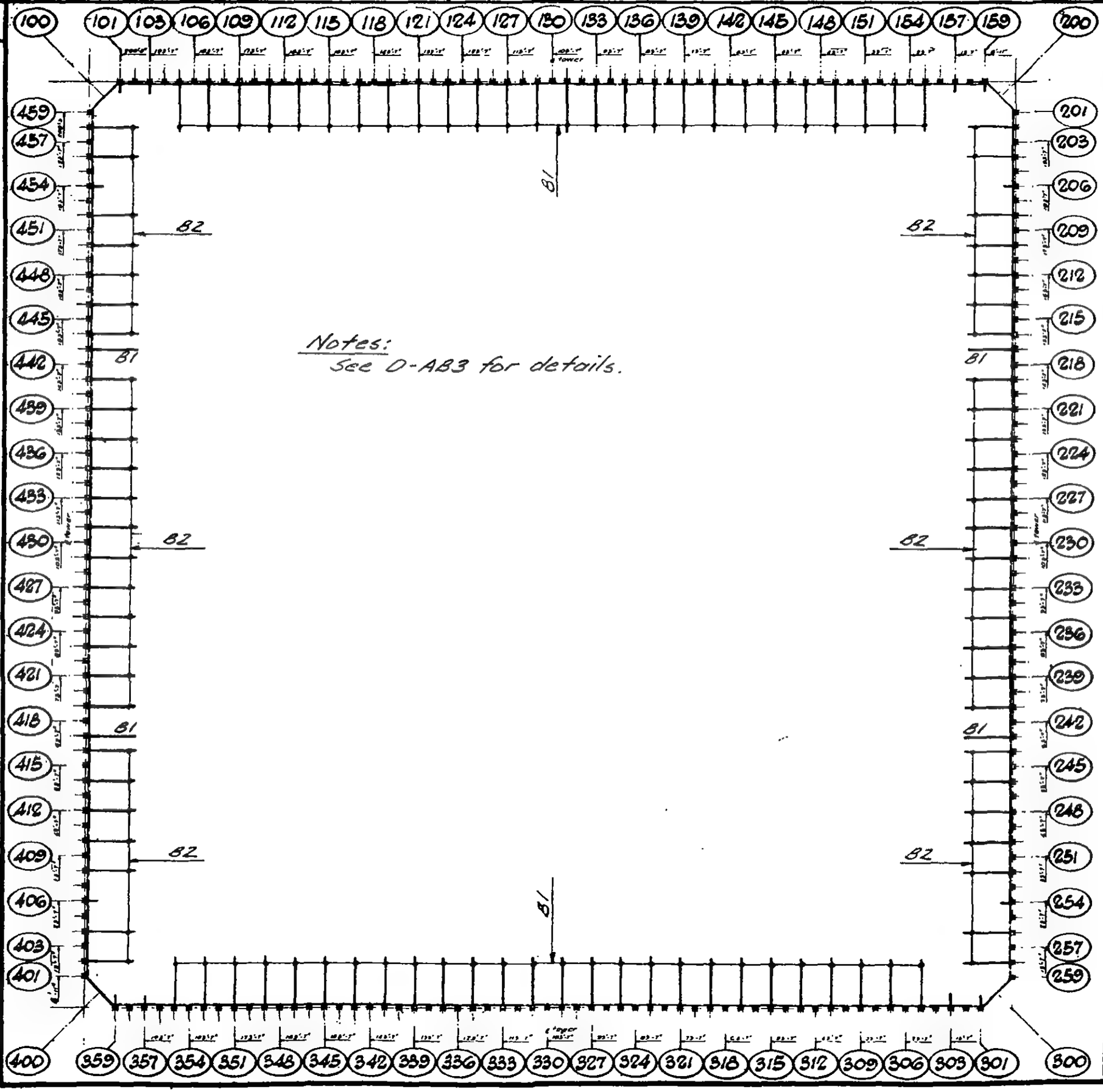

Notes:
See O-AB3 for details.

NORTH

TOWER A

NORTH

TOWER B

PER FLOOR	
No.	Type
56	B1
52	B2

DESIGNED: Kap

DRAWN: J. Adams

REVIEWED: W. Brewer

O-AB1-5

SKILLING, HELLE, CHRISTIANSEN, ROBERTSON — Structural & Civil Engineers

PROJECT: THE WORLD TRADE CENTER

TITLE: DAMPING UNIT KEY PLAN - FLOOR 43

DATE: 3/18/69

REVISIONS

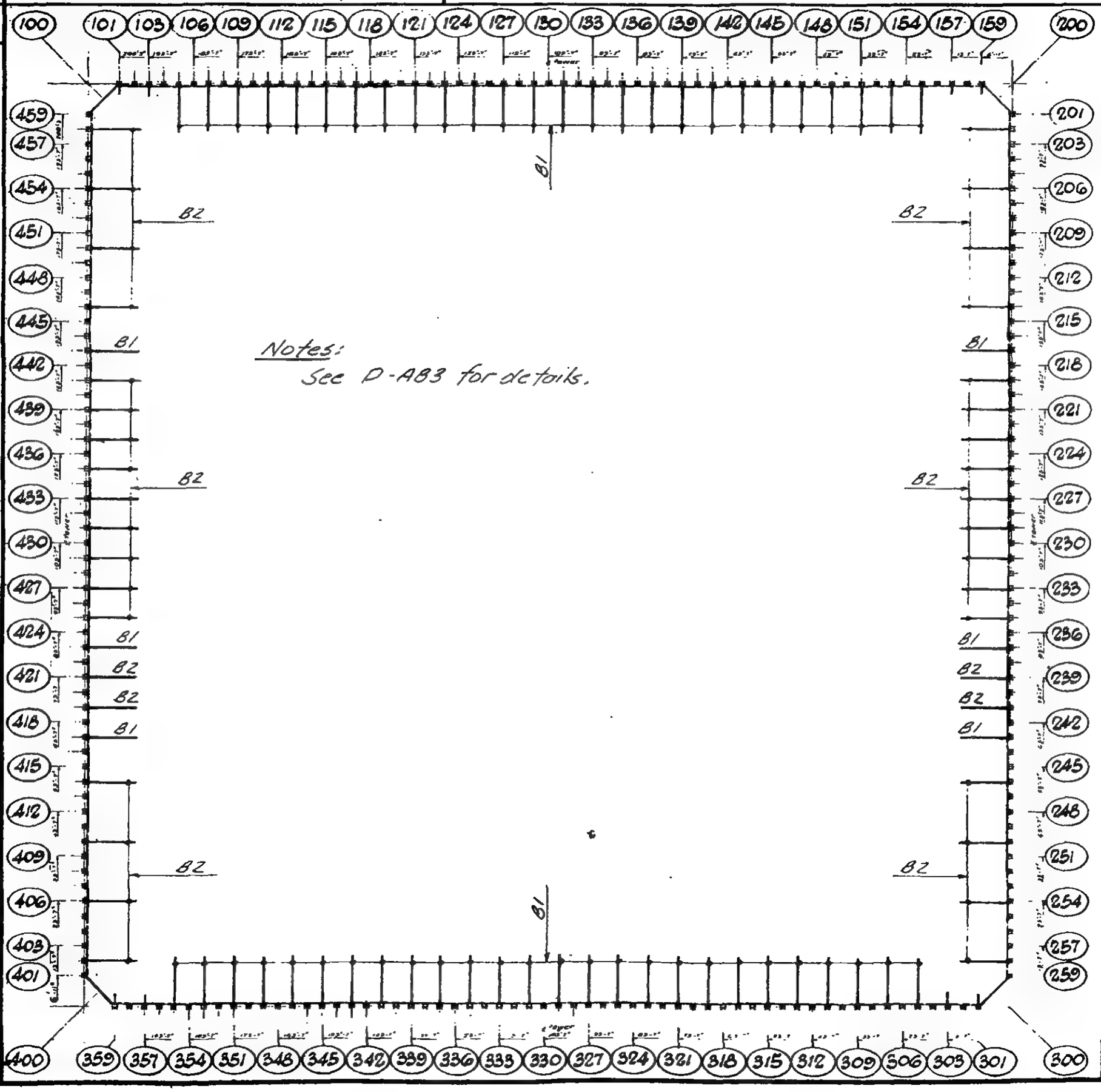

Notes:
See D-AB3 for details.

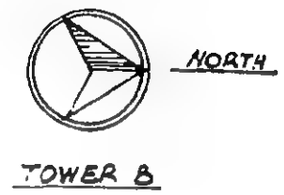

PER FLOOR	
No.	Type
58	B1
38	B2

DESIGNED: S. Karp

DRAWN: J. Adams

REVIEWED: W. Bdewer

D-AB1-6

SKILLING, HELLE, CHRISTIANSEN, ROBERTSON — Structural & Civil Engineers

PROJECT: THE WORLD TRADE CENTER

TITLE: DAMPING UNIT KEY PLAN - FLOOR 44

DATE: 3/18/69

REVISIONS

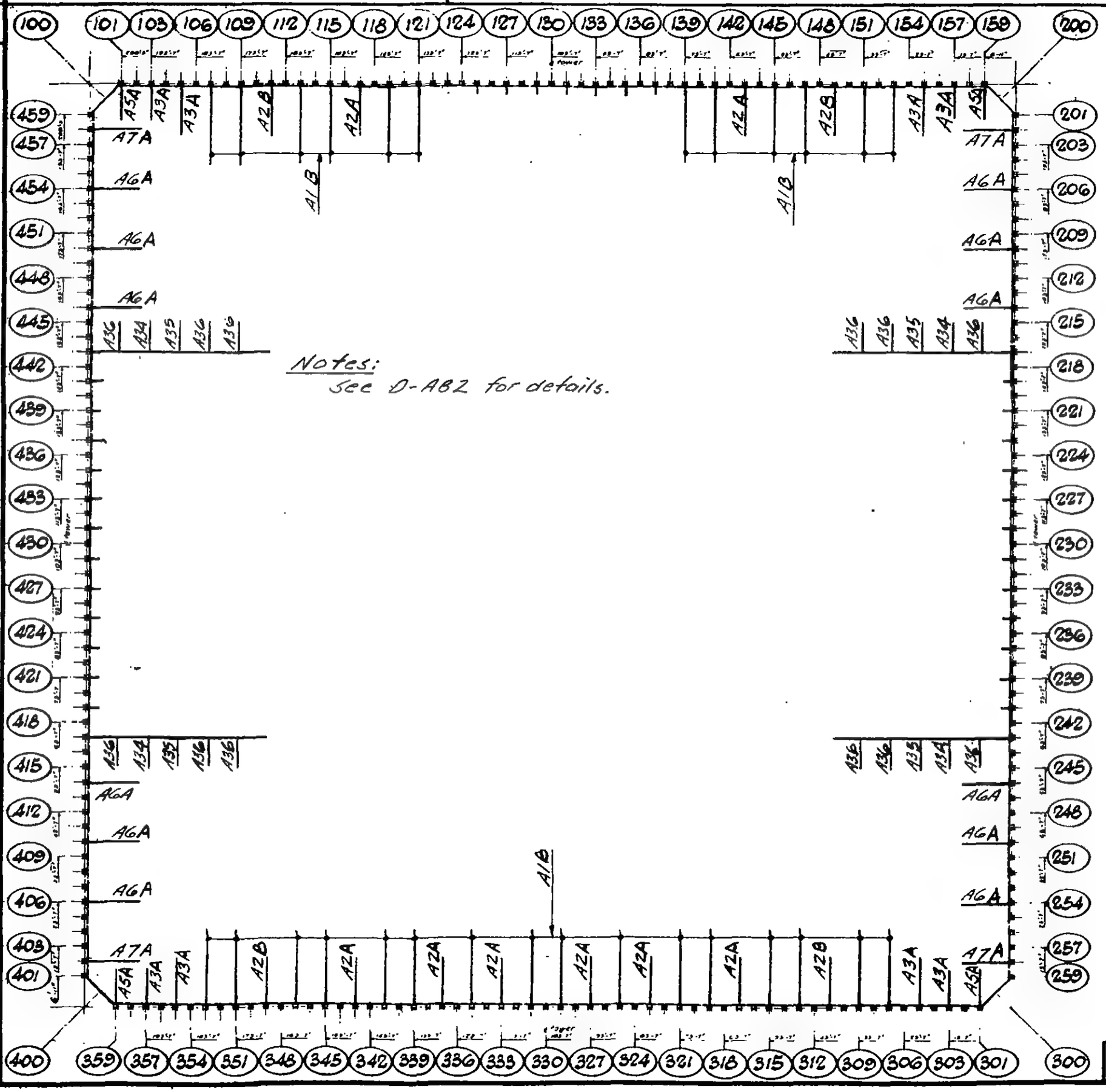

NORTH

TOWER A

NORTH

TOWER B

Notes:
See D-AB2 for details.

PER FLOOR	
No.	Type
28	A1B
8	A2A
4	A2B
8	A3A
4	A5A
12	A6A
4	A7A
4	A34
4	A35
12	A36

DESIGNED: T. Karp

DRAWN: J. Adams

REVIEWED: W. Brewer

D-AB1-7

SKILLING, HELLE, CHRISTIANSEN, ROBERTSON — Structural & Civil Engineers

PROJECT THE WORLD TRADE CENTER | TITLE DAMPING UNIT KEY PLAN - FLOOR 45 | DATE 3/18/69

REVISIONS

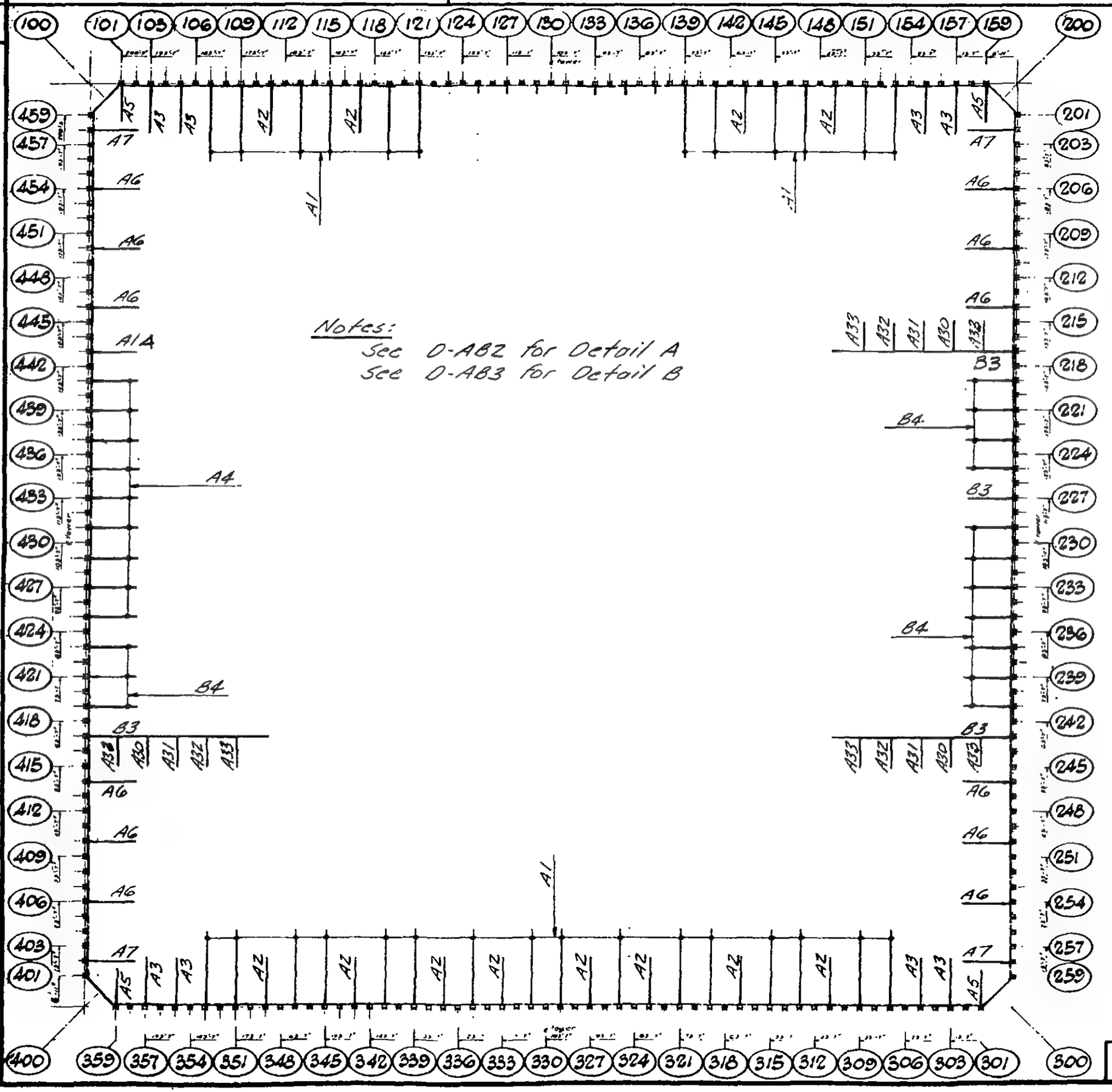

NORTH

TOWER A

NORTH

TOWER B

Notes:
See O-AB2 for Detail A
See O-AB3 for Detail B

PER FLOOR	
No.	Floor
29	A1(1)
12	A2
8	A3
9	A4
4	A5
12	A6
4	A7
4	B3
14	B4
3	A30
3	A31
3	A32
6	A33

(1) Incl. 1-A1A

DESIGNED Kap
DRAWN J. Adams
REVIEWED W. Brewer

O-AB1-B

SKILLING, HELLE, CHRISTIANSEN, ROBERTSON — Structural & Civil Engineers

PROJECT: THE WORLD TRADE CENTER

TITLE: DAMPING UNIT KEY PLAN - FLOORS 46-49

DATE: 3/18/69

REVISIONS

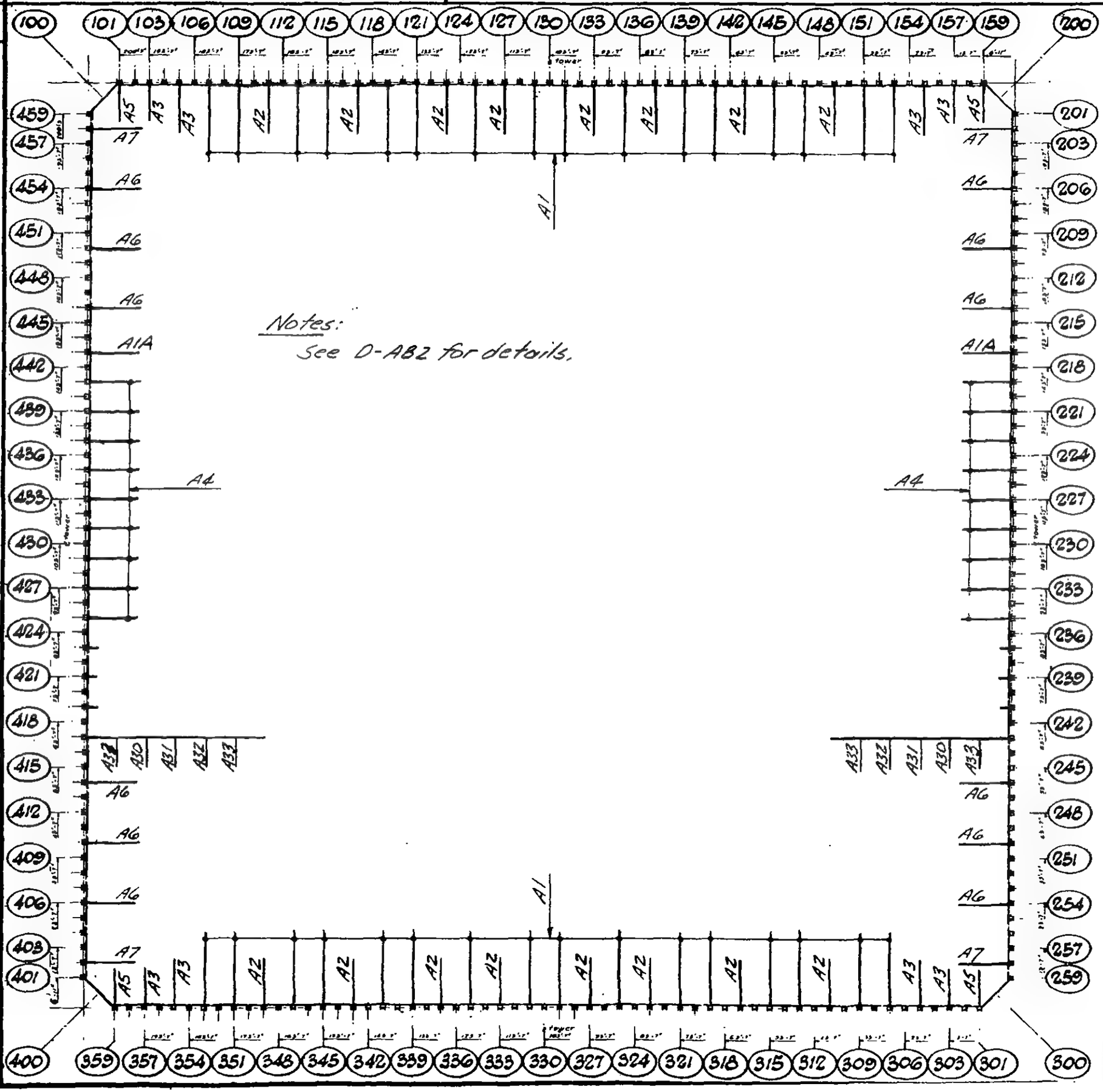

Notes:
See O-AB2 for details.

NORTH

TOWER A

NORTH

TOWER B

PER FLOOR	
No.	Type
34	A1(1)
16	A2
8	A3
18	A4
4	A5
12	A6
4	A7
2	A30
2	A31
2	A32
4	A33

(1) Incl. 2. A1A

DESIGNED S. Kaup

DRAWN J. Adams

REVIEWED W. Brewer

O-AB1-9

SKILLING, HELLE, CHRISTIANSEN, ROBERTSON — Structural & Civil Engineers

PROJECT: THE WORLD TRADE CENTER

TITLE: DAMPING UNIT KEY PLAN - FLOOR 77

DATE: 3/18/69

REVISIONS

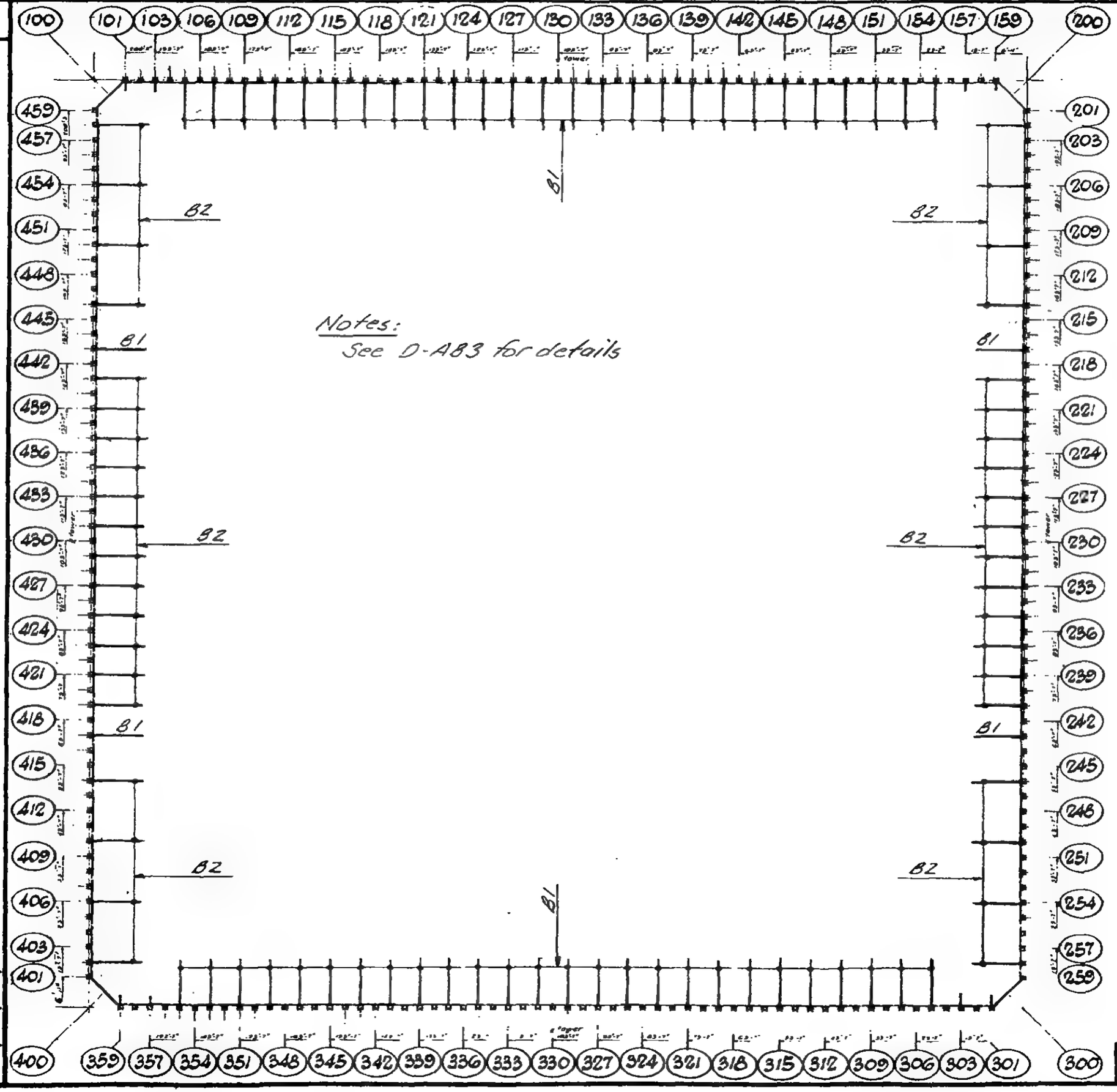

PER FLOOR	
No.	Type
56	B1
40	B2

DESIGNED: J. Kapp

DRAWN: J. Adams

REVIEWED: W. Brower

D-AB1-10

SKILLING, HELLE, CHRISTIANSEN, ROBERTSON — Structural & Civil Engineers

PROJECT: THE WORLD TRADE CENTER

TITLE: DAMPING UNIT KEY PLAN - FLOOR 78

DATE: 3/18/69

REVISIONS

8-29-69

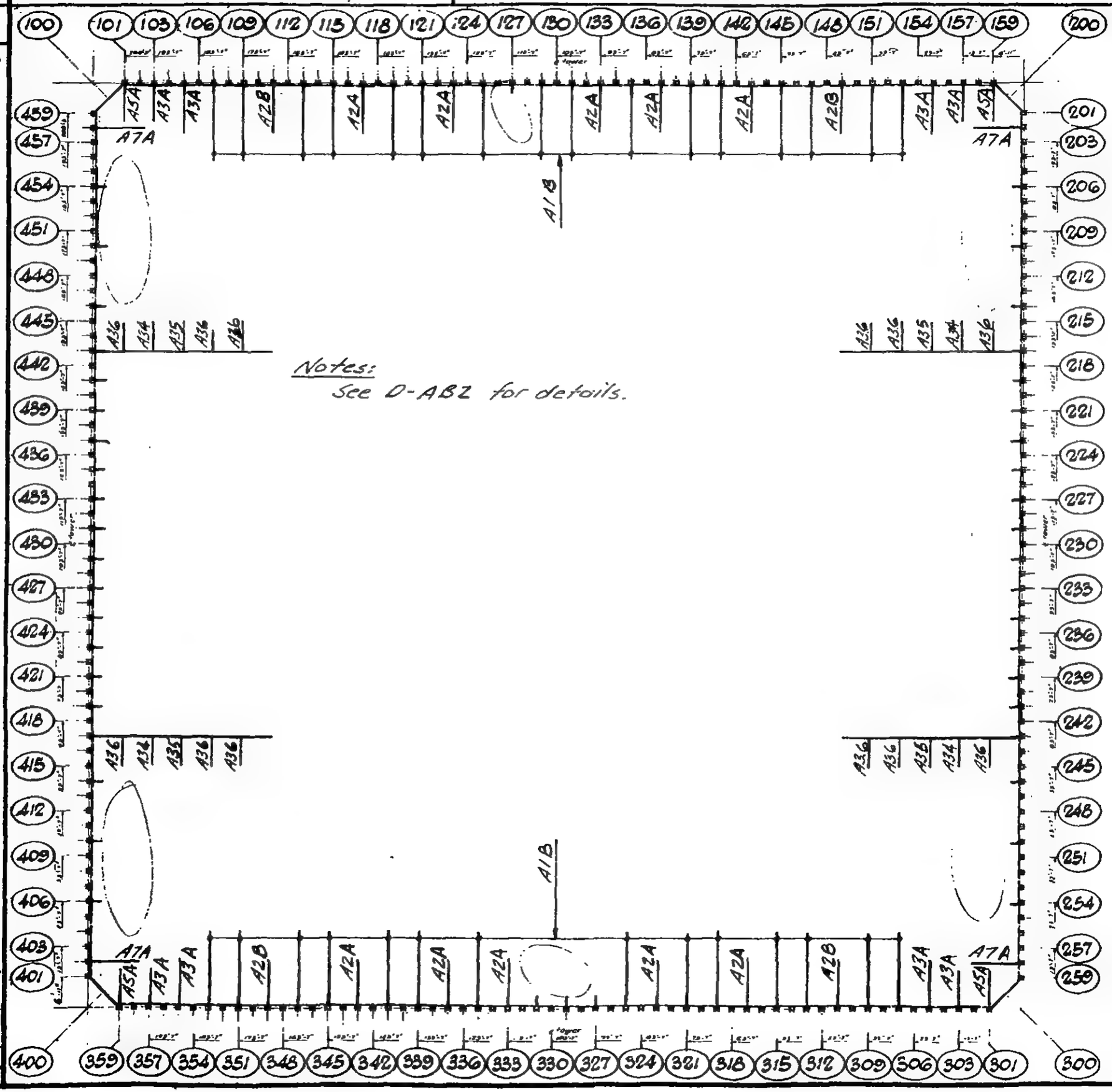

Notes:
See D-AB2 for details.

PER FLOOR	
No.	Type
3C	A1B
10	A2A
4	A2B
8	A3A
4	A5A
4	A7A
4	A34
4	A35
12	A36

DESIGNED: S. Kay

DRAWN: J. Adams

REVIEWED: W. Brewer

O-AB1-11

SKILLING, HELLE, CHRISTIANSEN, ROBERTSON — Structural & Civil Engineers

PROJECT: THE WORLD TRADE CENTER

TITLE: DAMPING UNIT KEY PLAN - FLOOR 79

DATE: 3/18/69

REVISIONS

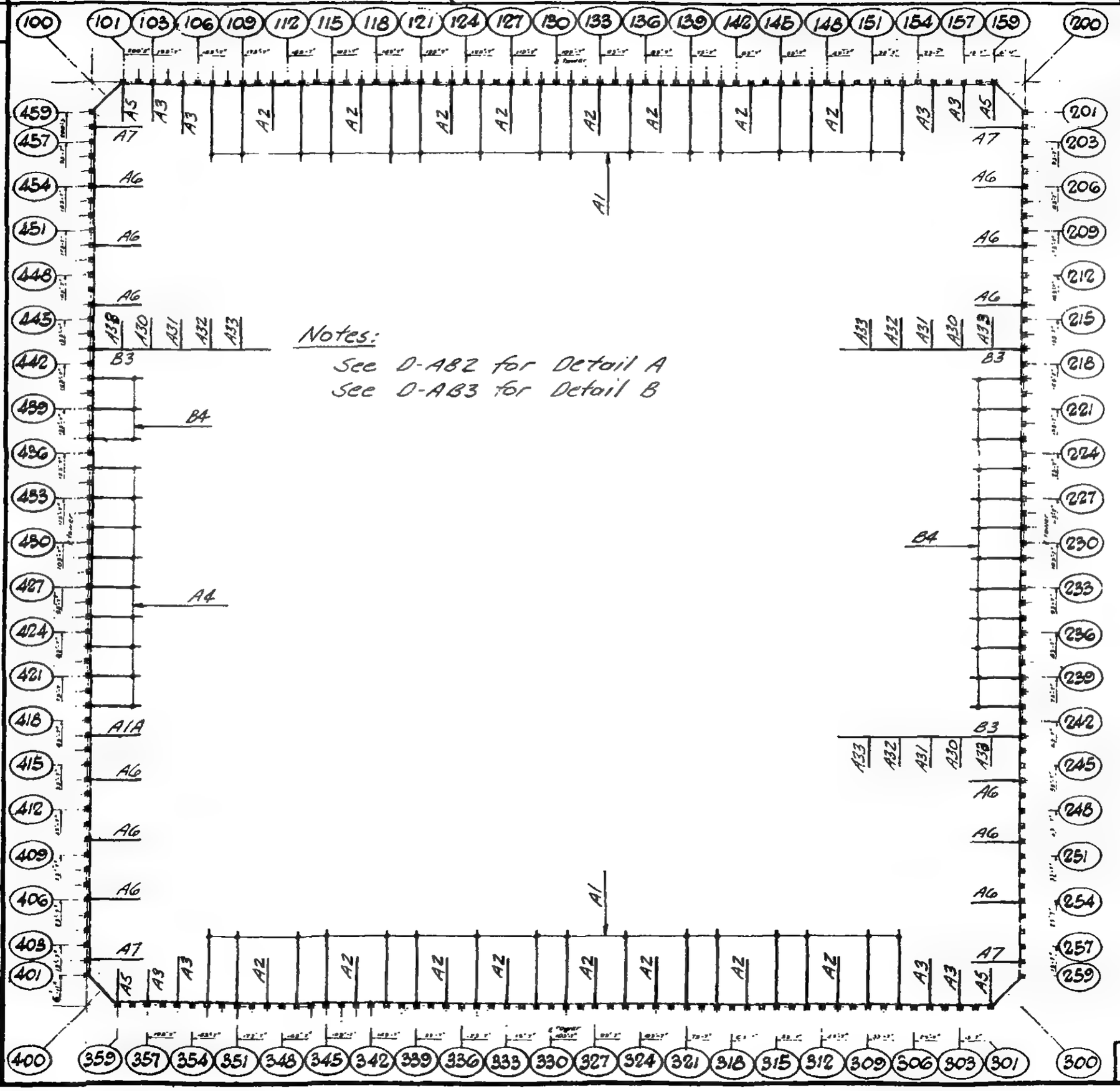

Notes:

See O-AB2 for Detail A

See O-AB3 for Detail B

PER FLOOR	
No.	Type
33	A1(1)
16	A2
8	A3
9	A4
4	A5
12	A6
4	A7
3	B3
15	B4
3	A30
3	A31
3	A32
6	A33

(1) Incl. 1-A1A

DESIGNED: S. Karp

DRAWN: J. Adams

REVIEWED: W. Baldwin

O-AB1-12

REVISIONS

SKILLING, HELLE, CHRISTIANSEN, ROBERTSON — Structural & Civil Engineers

PROJECT: THE WORLD TRADE CENTER

TITLE: DAMPING UNIT KEY PLAN - FLOORS 80-83

DATE: 3/18/69

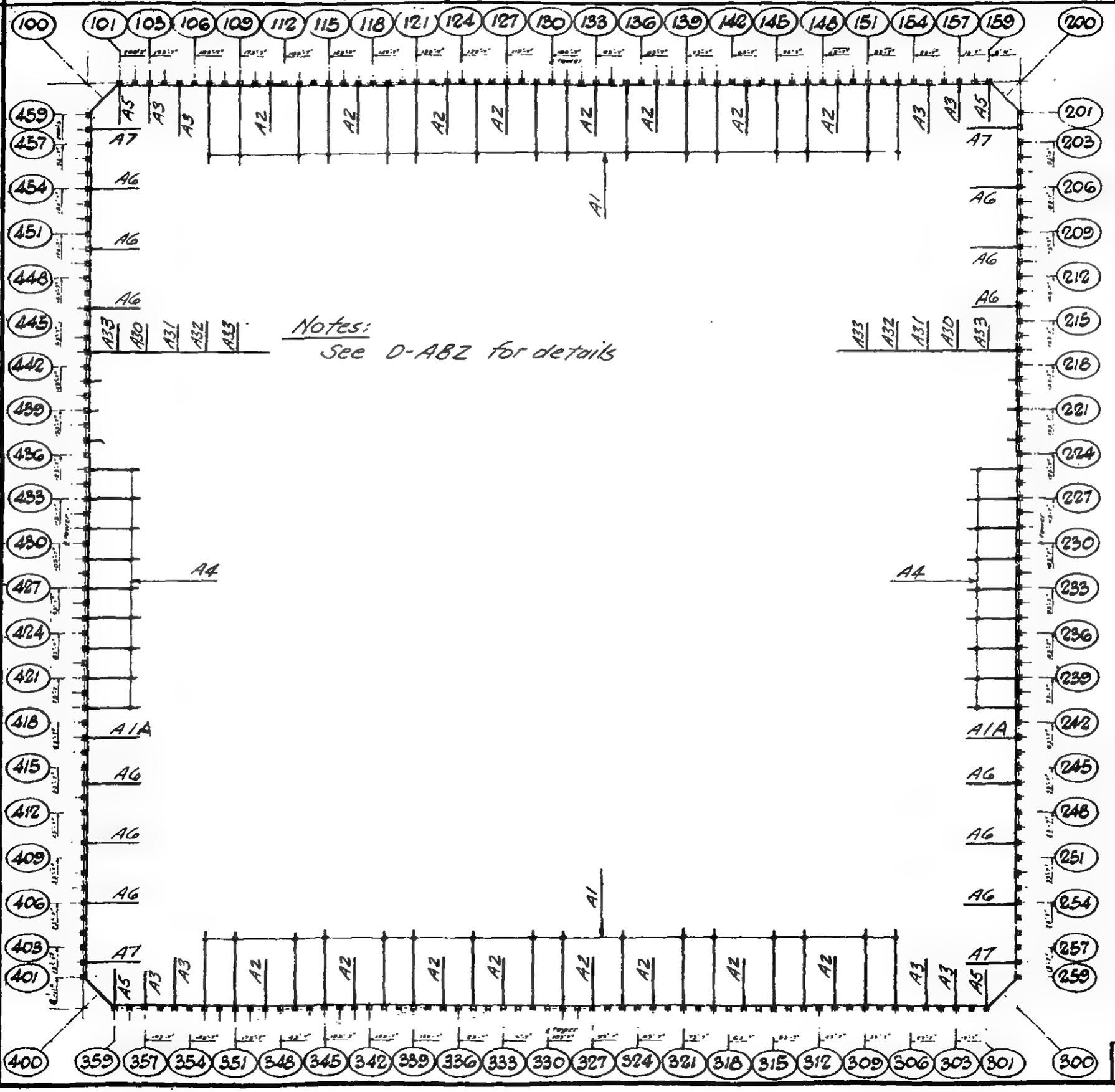

Notes:
See D-AB2 for details

PER FLOOR	
No.	Type
34	A1(1)
16	A2
8	A3
18	A4
4	A5
12	A6
4	A7
2	A30
2	A31
2	A32
4	A33

(1) Incl. 2-A1A

DESIGNED: S. Kay
DRAWN: J Adams
REVIEWED: W. Brewer

D-AB1-13

SKILLING, HELLE, CHRISTIANSEN, ROBERTSON — Structural & Civil Engineers

PROJECT THE WORLD TRADE CENTER

TITLE DAMPING UNIT KEY PLAN - FLOOR 107 - TOWER 'A'

DATE 9-15-71

REVISIONS

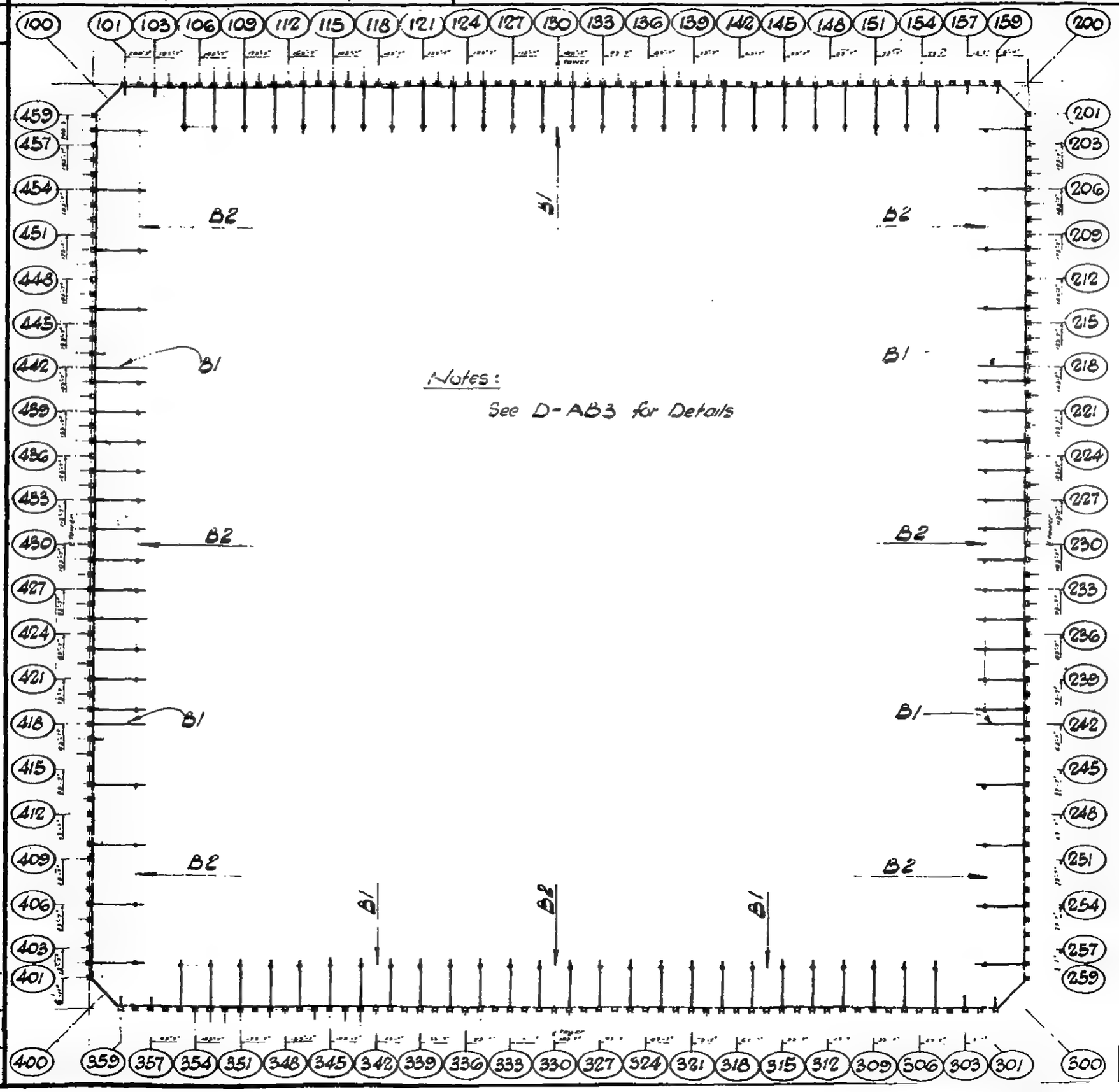

Notes:

See D-AB3 for Details

PER FLOOR	
No.	Type
54	B1
42	B2

DESIGNED

DRAWN

REVIEWED

D-AB1-14.1

SKILLING, HELLE, CHRISTIANSEN, ROBERTSON — Structural & Civil Engineers

PROJECT THE WORLD TRADE CENTER

TITLE DAMPING UNIT KEY PLAN - FLOOR 107 - TOWER 'B'

DATE 9-15-71

REVISIONS

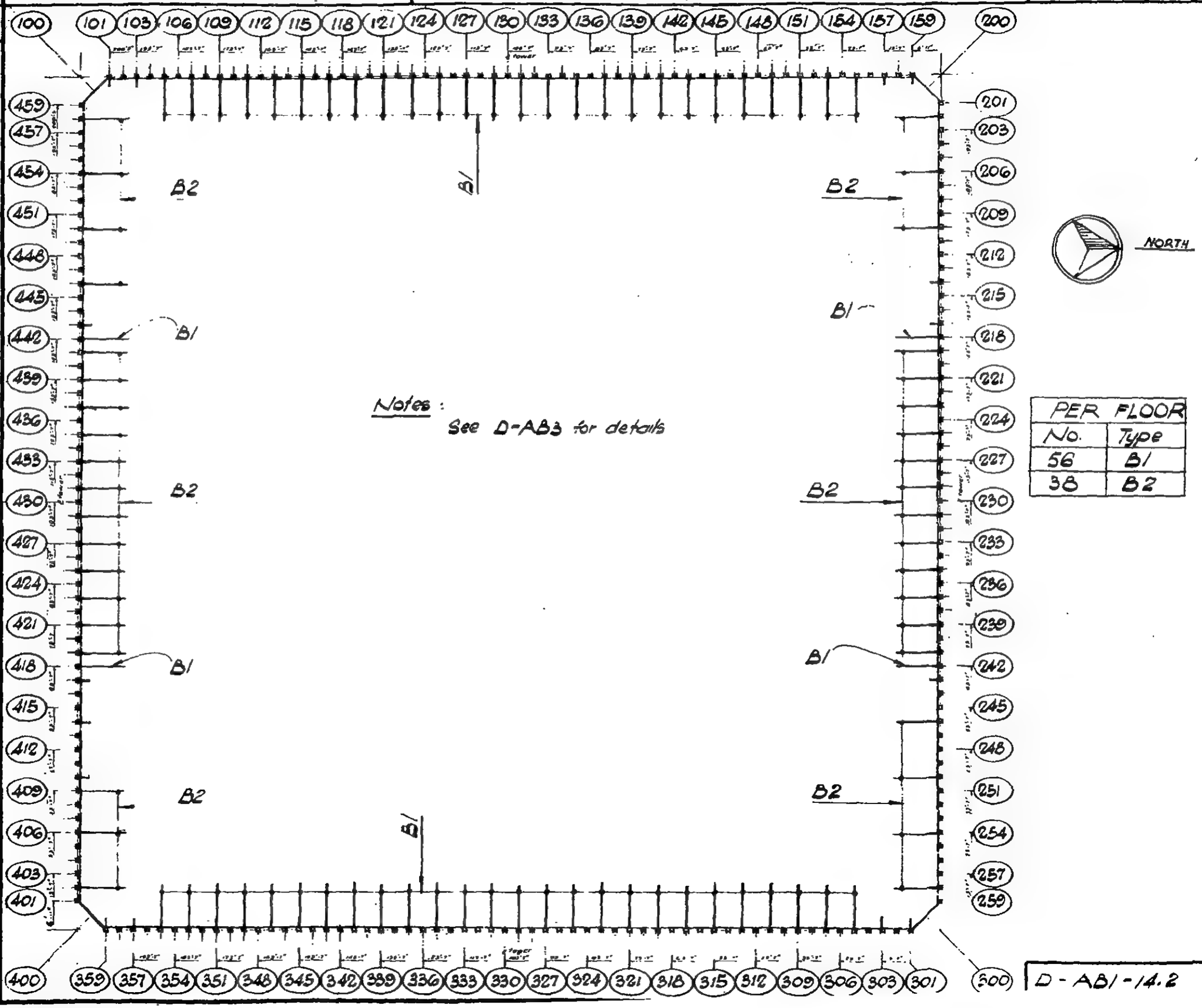

Notes :

See D-AB3 for details

PER FLOOR	
No.	Type
56	B1
38	B2

DESIGNED

DRAWN

REVIEWED

D - AB1 - 14.2

SKILLING, HELLE, CHRISTIANSEN, ROBERTSON — Structural & Civil Engineers

PROJECT: THE WORLD TRADE CENTER | TITLE: DETAIL A1, A2, A3, A4 | DATE: 3/18/69

REVISIONS

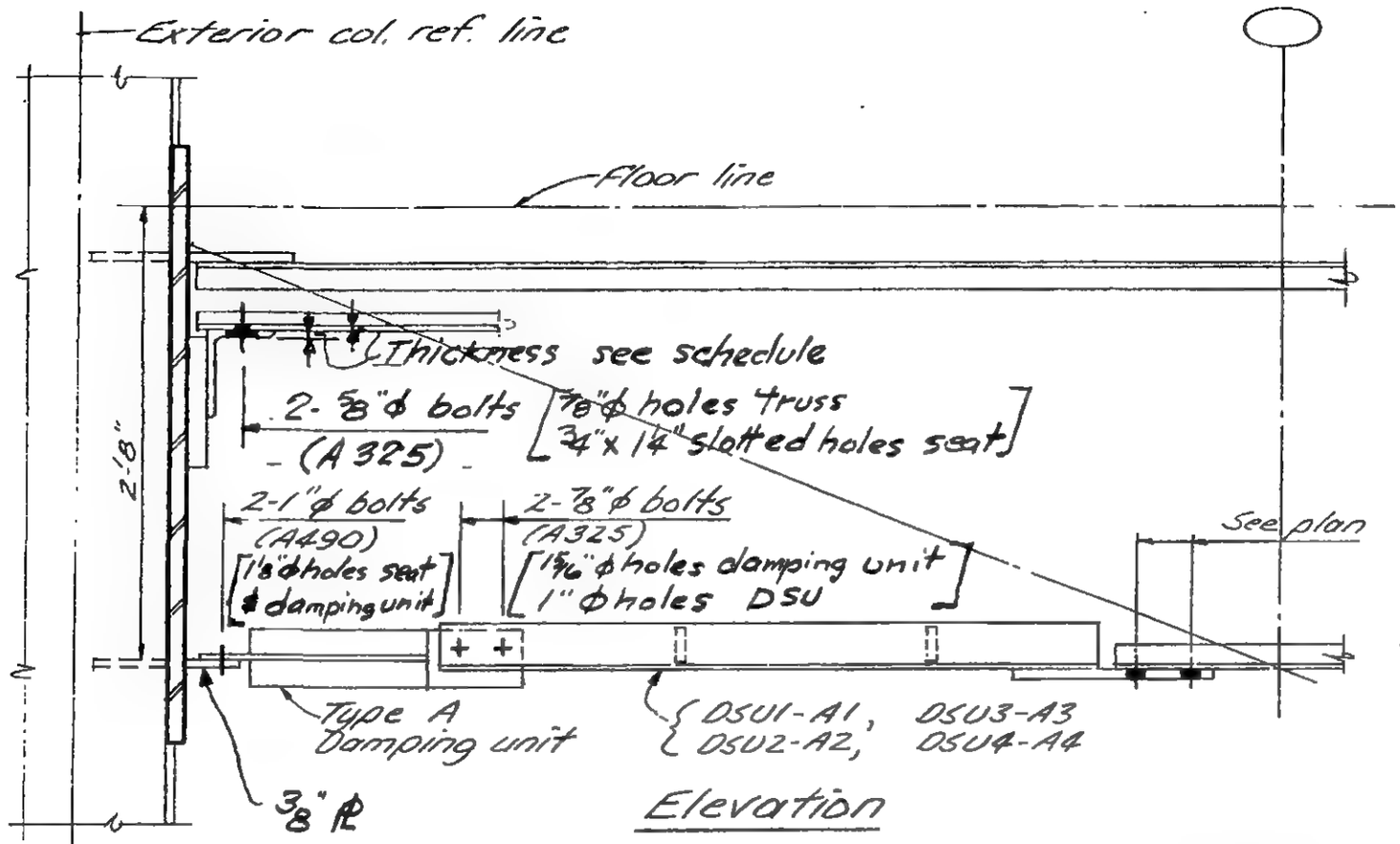

Elevation

Note 1: This dimension may vary by ± ½" erection tolerance from dimensions indicated.

SCHEDULE

Detail No.	Seat ∠ thickness	Bearing ∠ thick.
A1	⅝"	.25"
A1A	¾"	.25"
A1B	⅝"	.37"
A2	⅝"	.25"
A2A	⅝"	.37"
A2B	¾"	.37"
A3	½"	.25"
A3A	⅝"	.37"
A4	½"	.25"

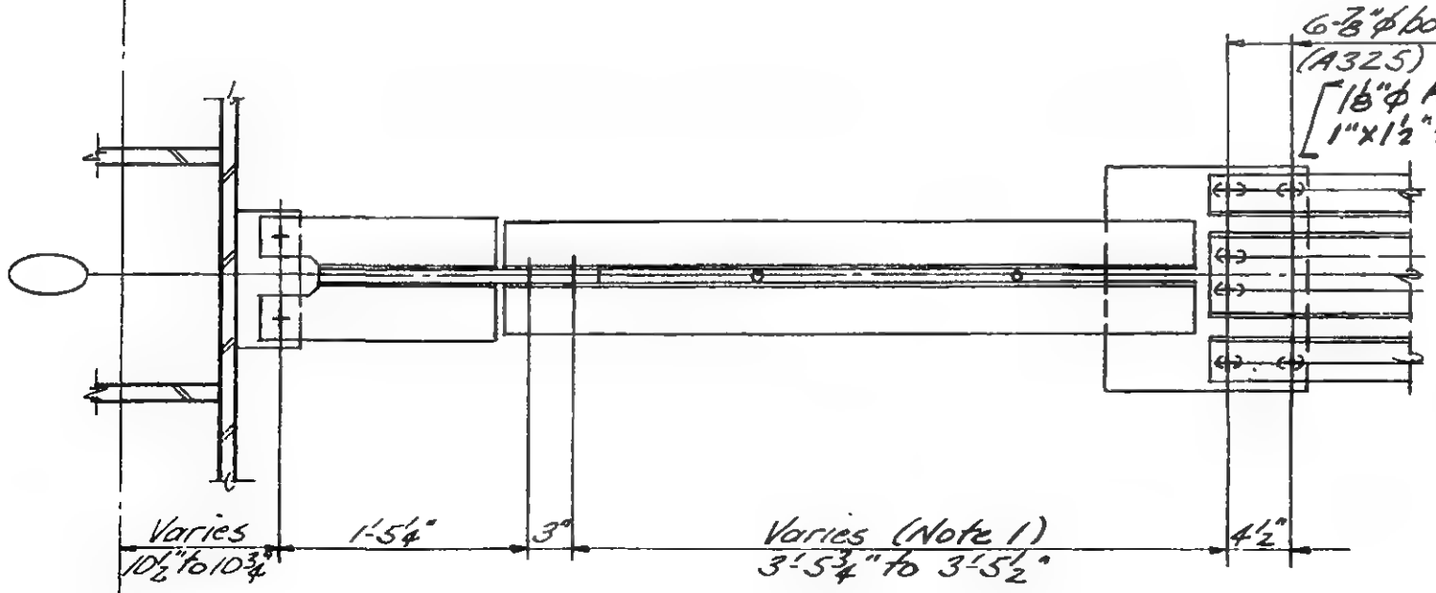

Plan

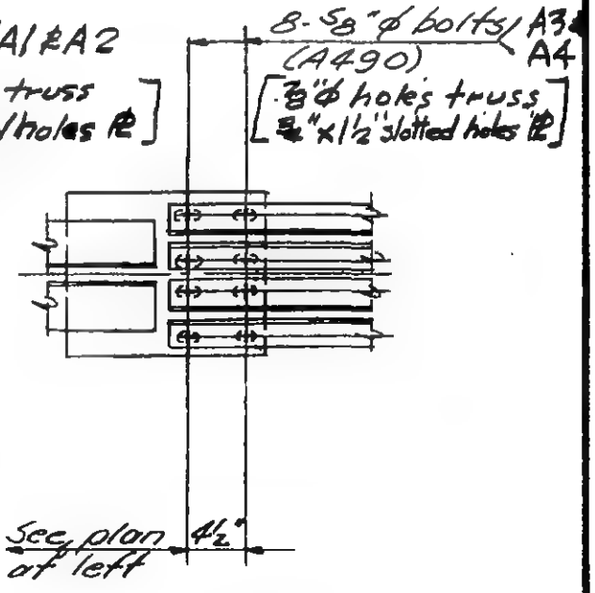

Part Plan
A3 & A4

DESIGNED: S. Karp
DRAWN: J. Adams
REVIEWED: W. Brewer

O-AB2-1

SKILLING, HELLE, CHRISTIANSEN, ROBERTSON — Structural & Civil Engineers

PROJECT THE WORLD TRADE CENTER | TITLE DETAIL A5 | DATE 3/18/69

REVISIONS

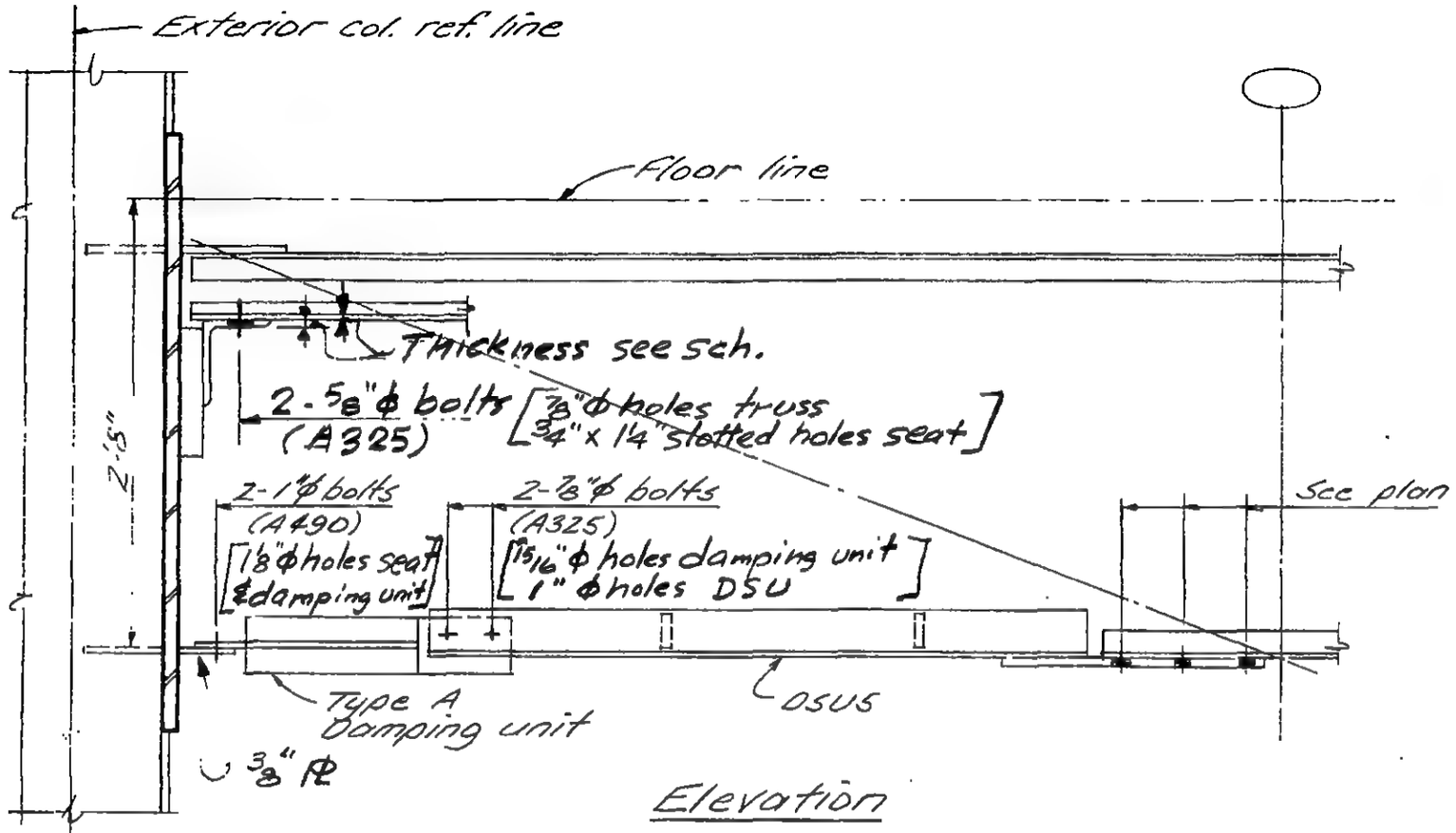

Elevation

SCHEDULE		
Detail No.	Seat ∠ thick.	Bearing ∠ thick.
A5	1/2"	.25"
A5A	5/8"	.37"

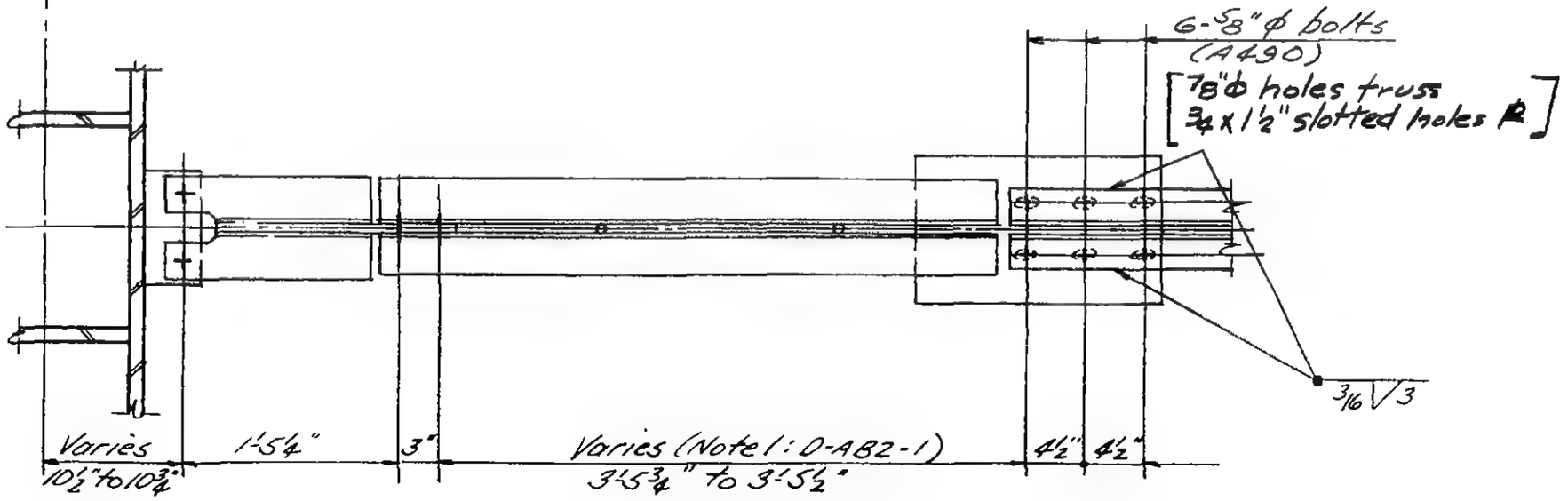

Plan

DESIGNED S. Kaup
DRAWN J. Adams
REVIEWED W. Brewer

D-AB2-2

SKILLING, HELLE, CHRISTIANSEN, ROBERTSON — Structural & Civil Engineers

PROJECT THE WORLD TRADE CENTER | TITLE DETAIL A6 & A7 | DATE 3/18/69

REVISIONS

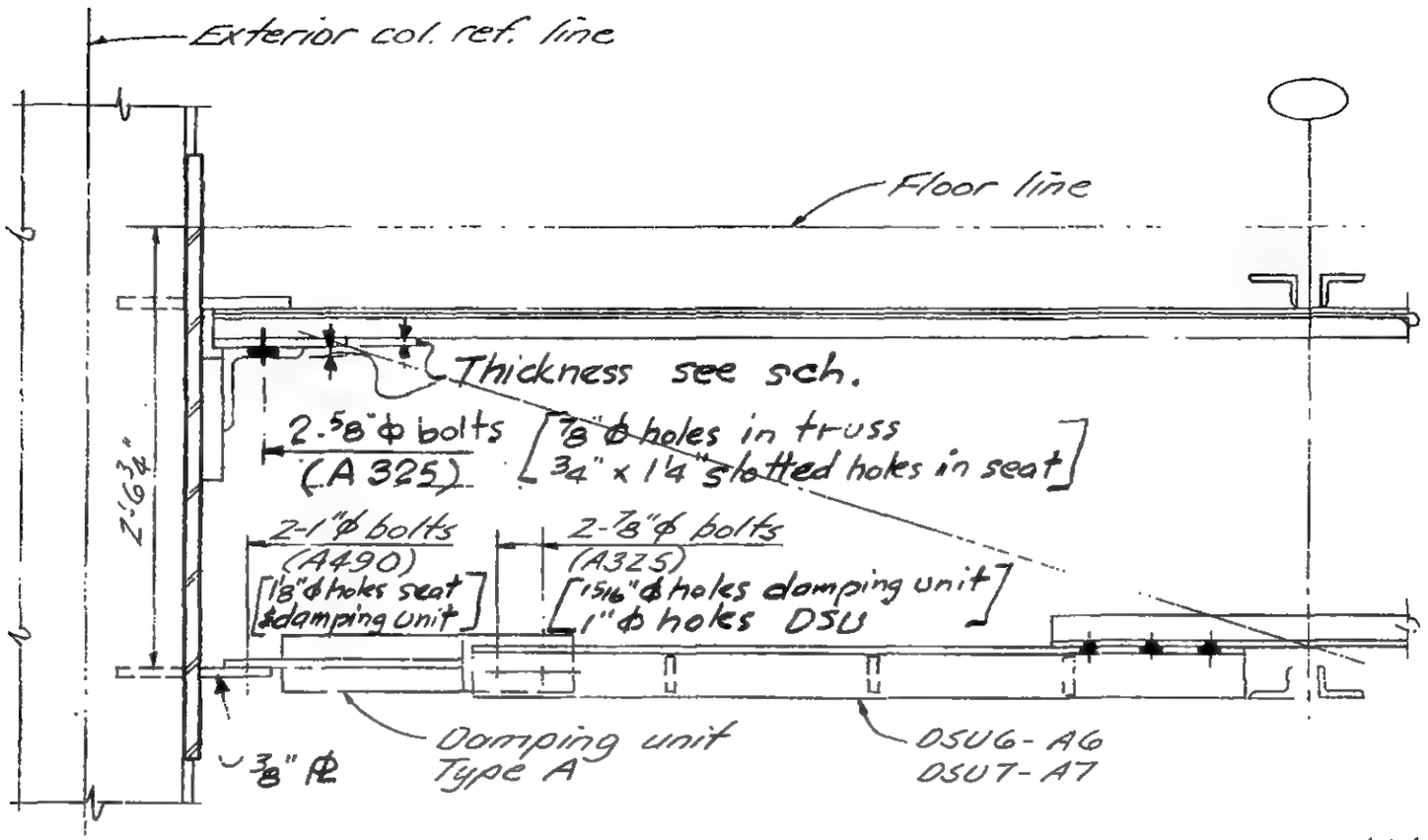

SCHEDULE		
Detail No	Seat ∠ thick.	Bearing ∠ thick.
A6	⅜"	.25
A6A	⅝"	.25
A7	½"	.25
A7A	⅝"	.25

Elevation

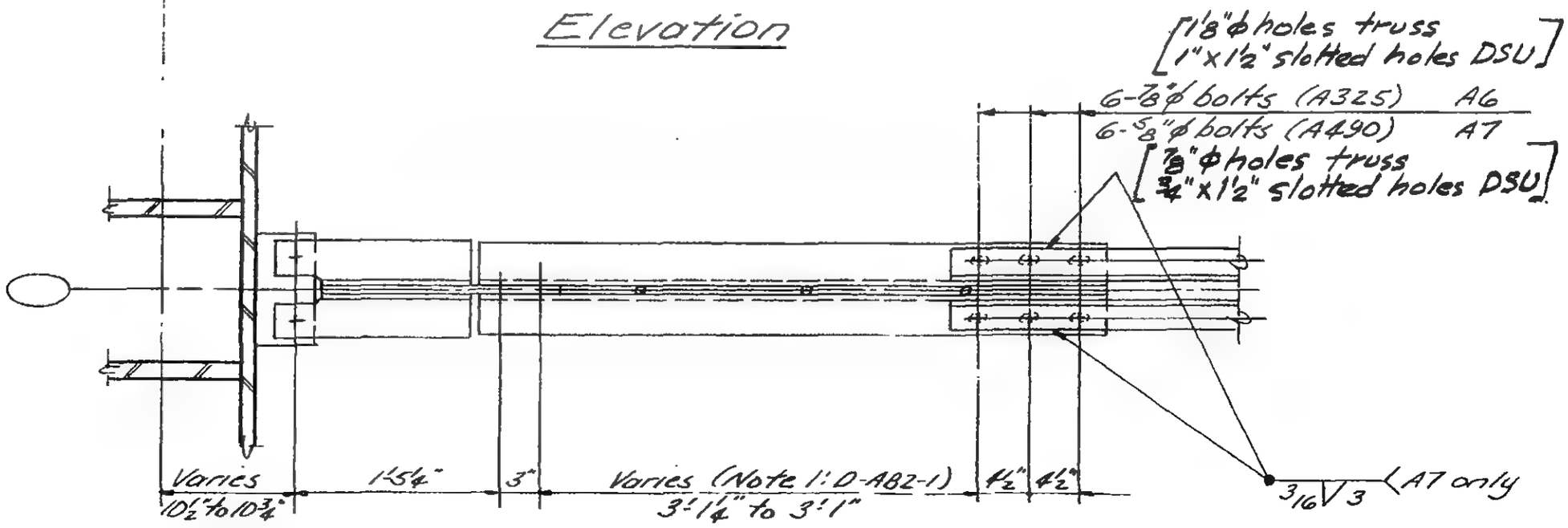

Plan

DESIGNED S. Karp
DRAWN J. Adams
REVIEWED W. Brewer

D-AB2-3

SKILLING, HELLE, CHRISTIANSEN, ROBERTSON — Structural & Civil Engineers

PROJECT THE WORLD TRADE CENTER | TITLE DETAIL A8 - TOWER B ONLY | DATE 3/18/69

REVISIONS

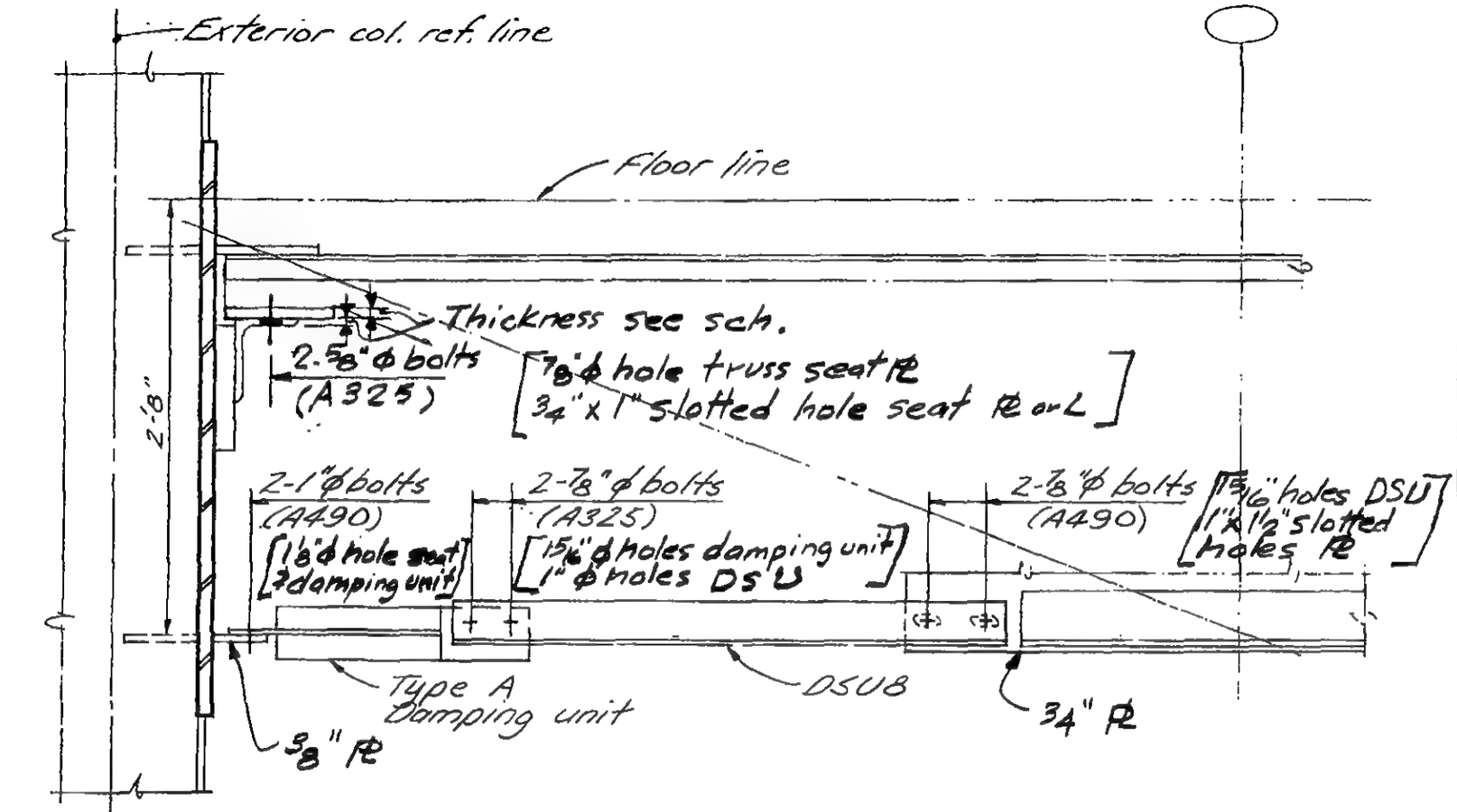

Elevation

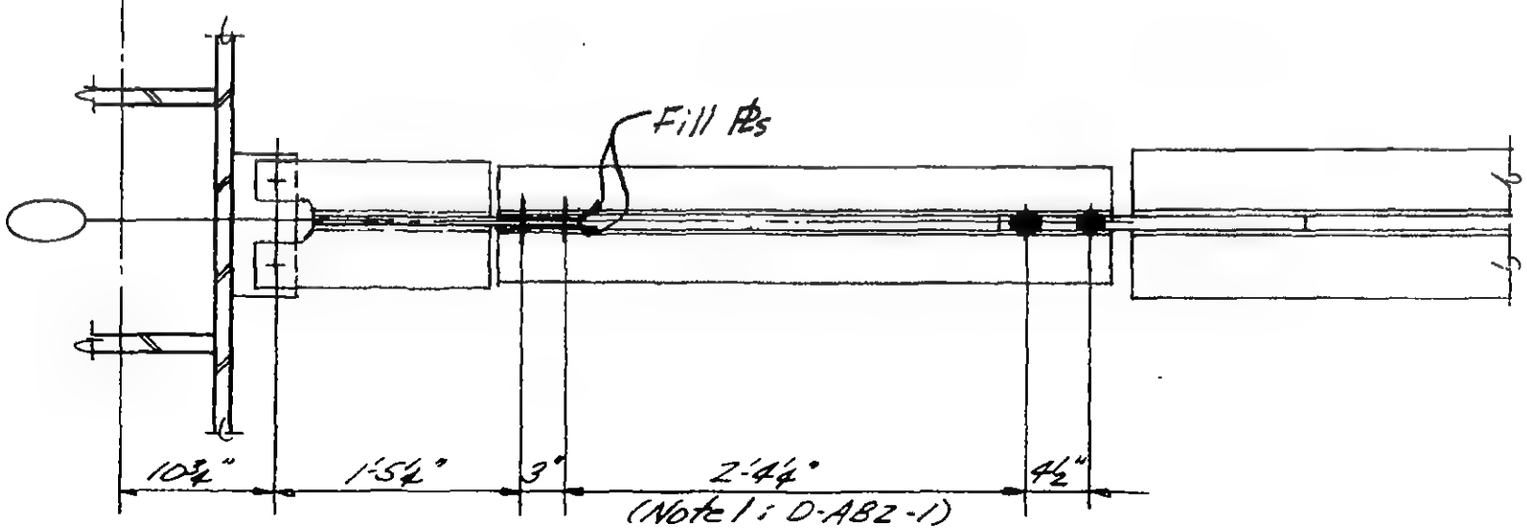

Plan

SCHEDULE		
Detail No.	Seat R or L	Truss Seat PL
A8	1"	3/4"
A8A	1/2"	1/2"
A8B	5/8"	1/2"
A8C	3/4"	1/2"

DESIGNED S. Kay
DRAWN J. Adams
REVISED W. Brewer

O-ABZ-4

SKILLING, HELLE, CHRISTIANSEN, ROBERTSON — Structural & Civil Engineers

PROJECT THE WORLD TRADE CENTER | TITLE DETAIL A9 - TOWER B ONLY | DATE 3/18/69

REVISIONS

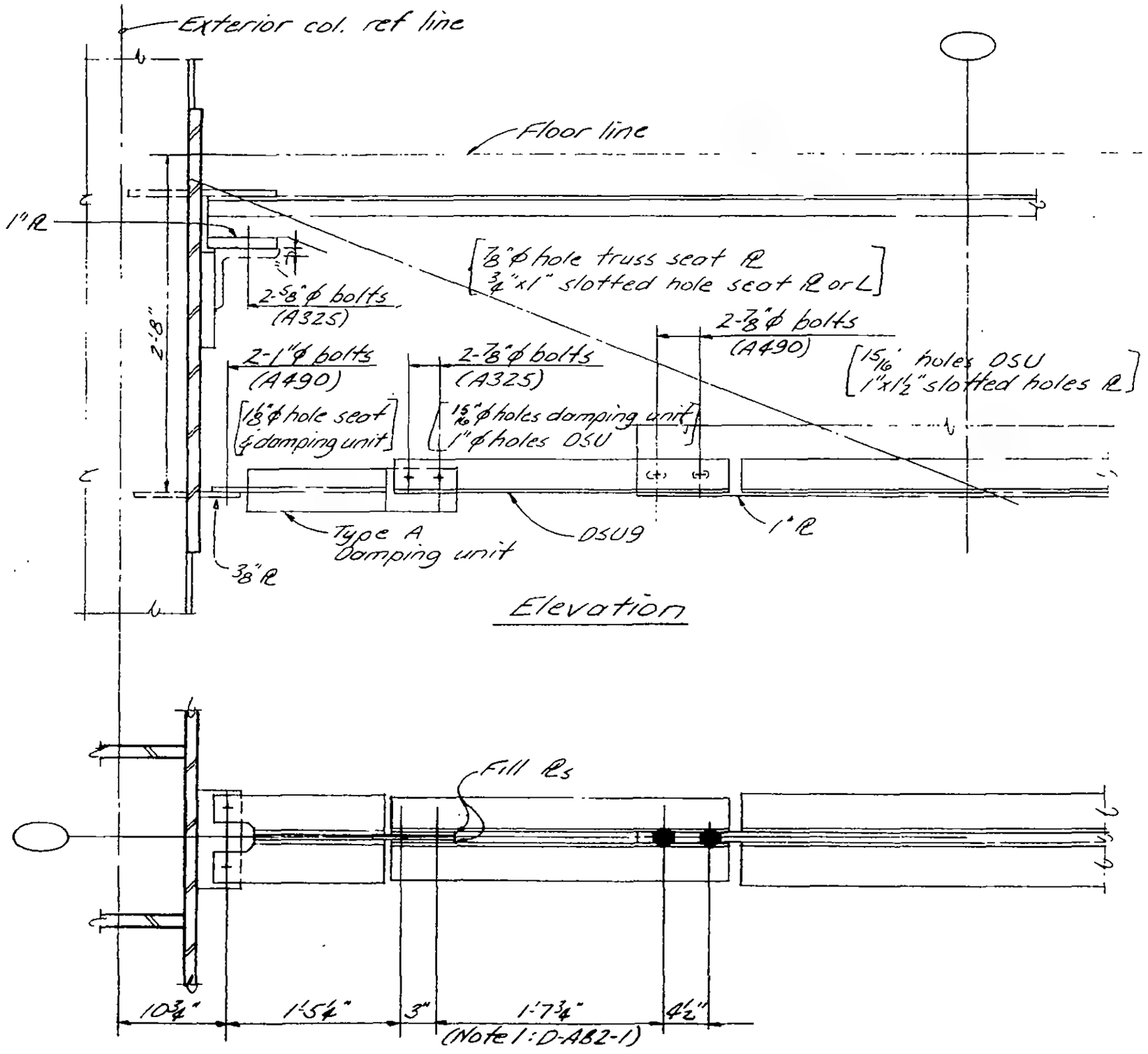

DESIGNED S. Karp
DRAWN J. Adams
REVIEWED W. Brewer

D-AB2-5

SKILLING, HELLE, CHRISTIANSEN, ROBERTSON — Structural & Civil Engineers

PROJECT: THE WORLD TRADE CENTER | TITLE: DETAIL A10 - TOWER B ONLY | DATE: 3/18/69

REVISIONS

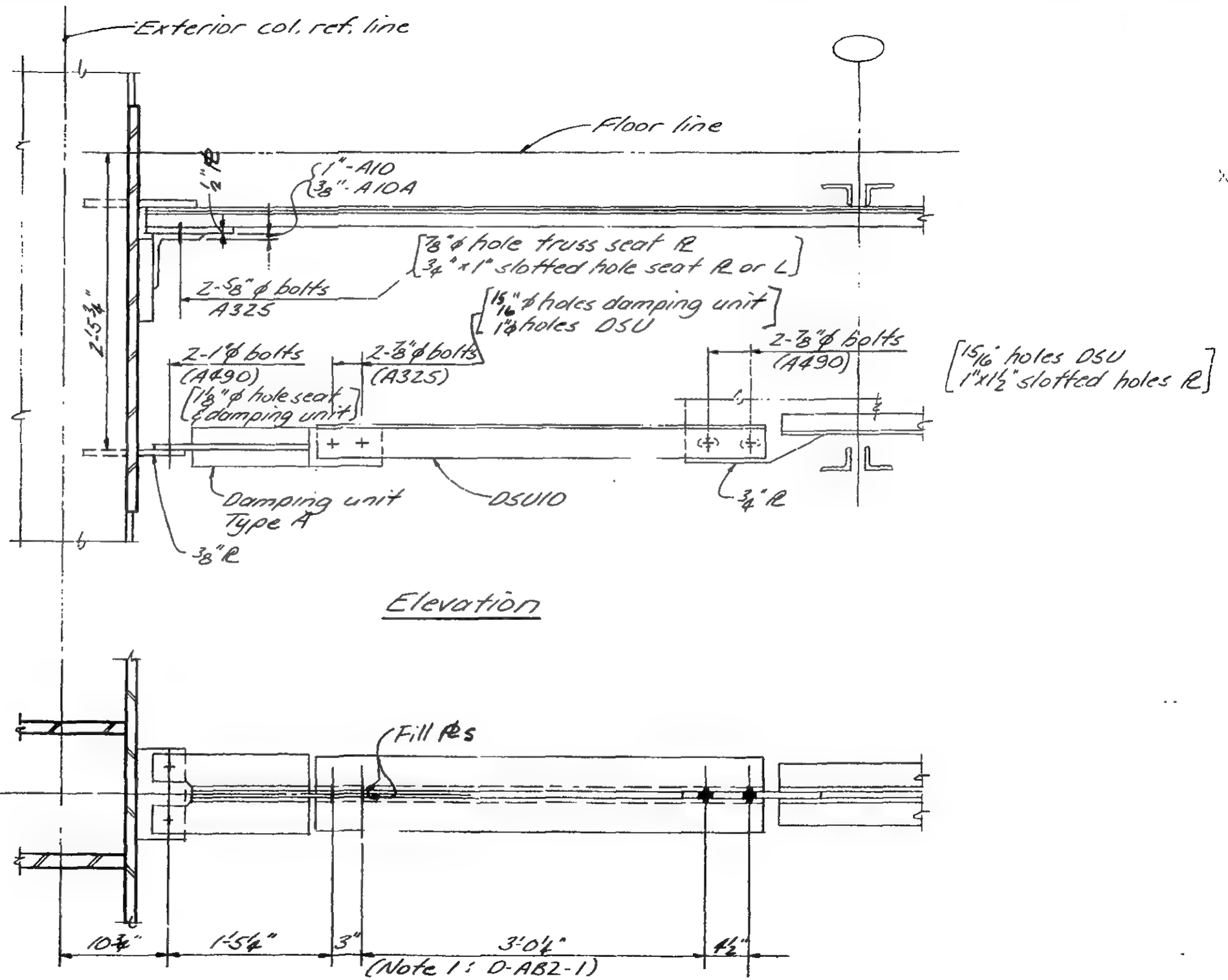

DESIGNED S. Kapp
DRAWN J. Adams
REVIEWED W. Brewer

D-AB2-6

SKILLING, HELLE, CHRISTIANSEN, ROBERTSON — Structural & Civil Engineers

PROJECT THE WORLD TRADE CENTER | TITLE DETAIL A20-A23, A30-A38 | DATE 3/18/69

REVISIONS

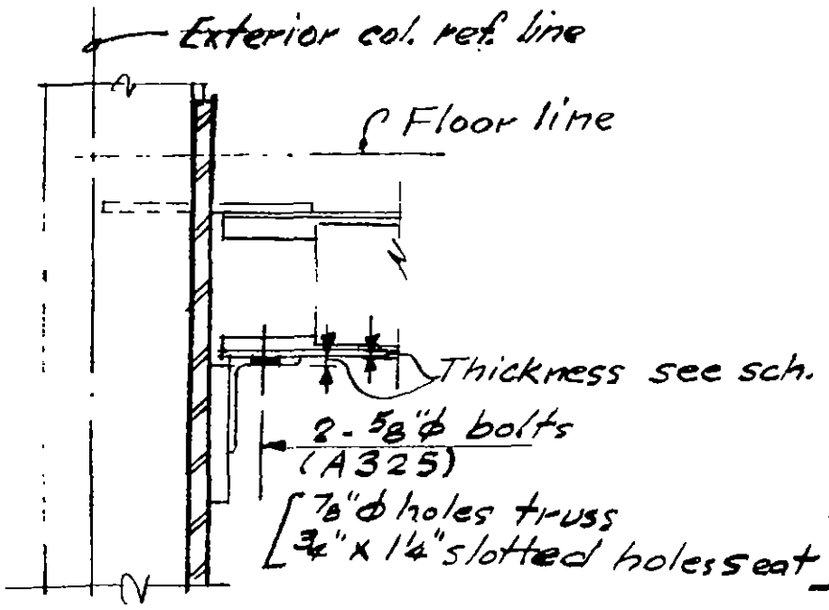

SCHEDULE		
Detail No.	Seat ∠ thick.	Bearing ∠ thick.
A20	⅝"	.25"
A21	¾"	.25"
A22	⅝"	.37"
A23	⅝"	.25"

DETAIL A20-A23

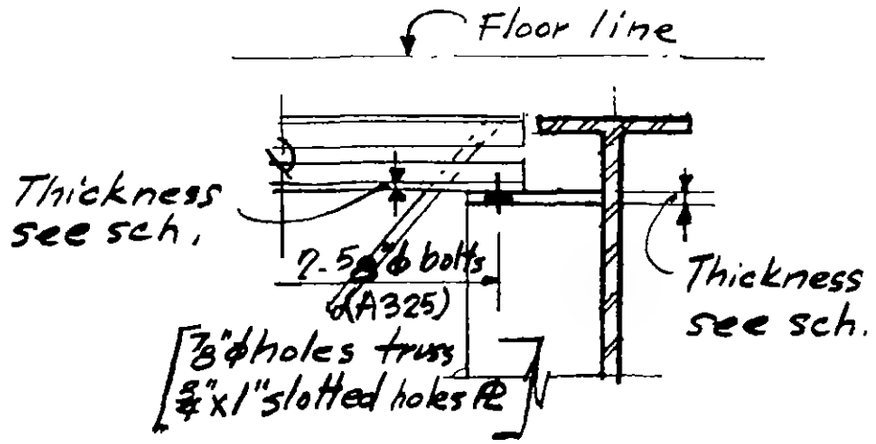

DETAIL A30-A36

SCHEDULE		
Detail No.	Seat PL thick.	Bearing ∠ or PL
A30	⅝"	.25"
A31	¾"	.25"
A32	⅞"	.31"
A33	⅞"	.25"
A34	⅝"	.37"
A35	¾"	.37"
A36	⅞"	.37"
A37	1"	¾"
A38	¾"	¾"

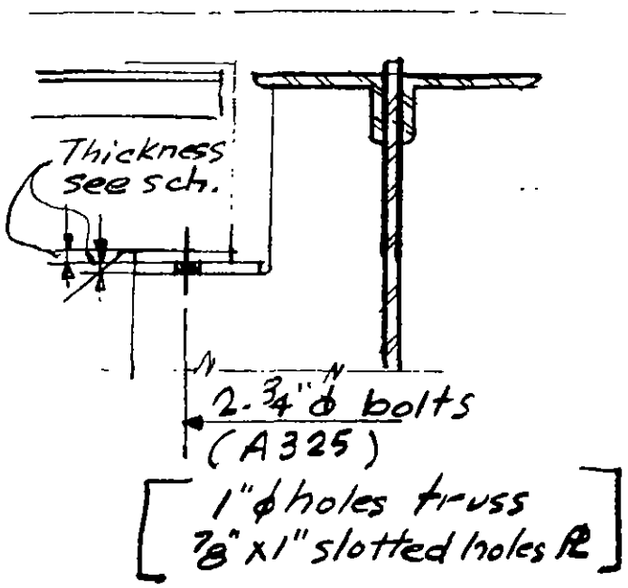

DETAIL A37 & A38

DESIGNED

DRAWN

REVIEWED W. Brewer

D-AB2-7

SKILLING, HELLE, CHRISTIANSEN, ROBERTSON — Structural & Civil Engineers

PROJECT: THE WORLD TRADE CENTER | TITLE: DETAILS B-1 & B-2 | DATE: 3/18/69

REVISIONS

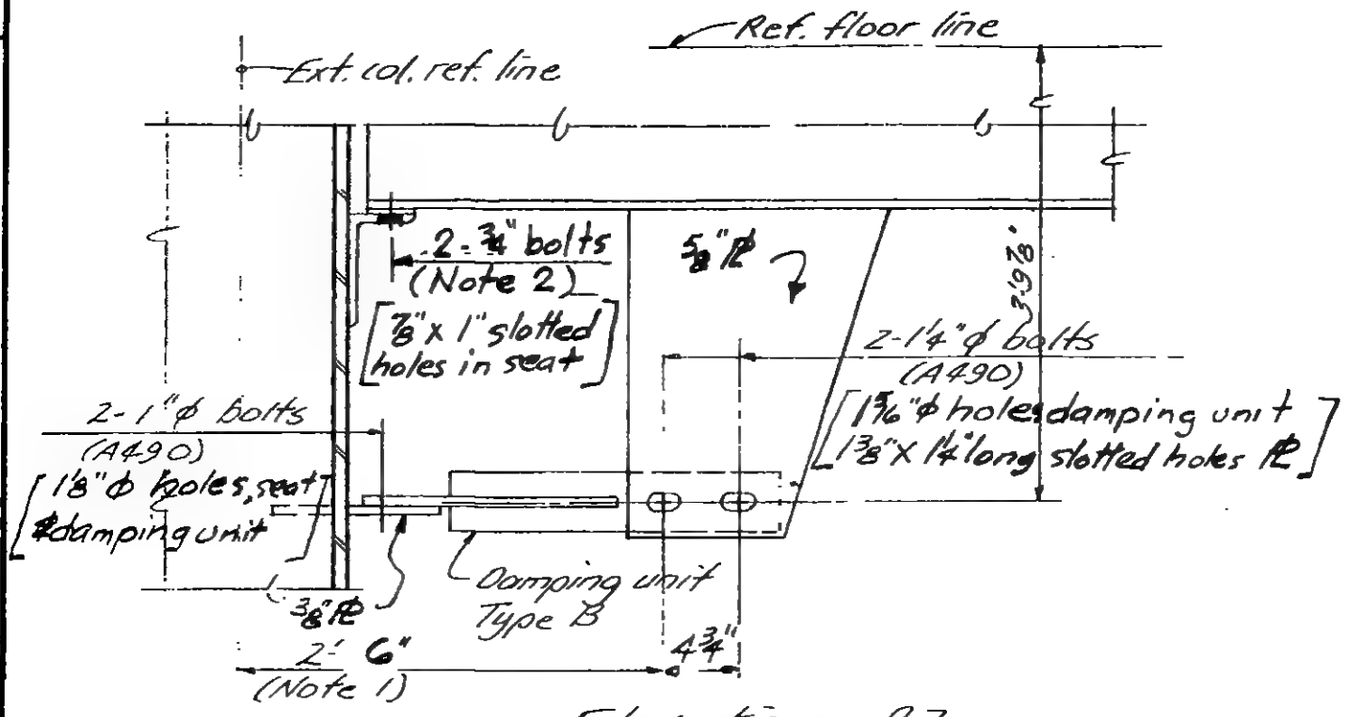

Elevation B2

Note 1: This dimension may vary by ± ½" erection tolerance from dimension indicated.

Note 2: Bolts to be A307 or A325 hand tightened. If A325 are torqued, loosen after top PL is welded & before concrete is cast.

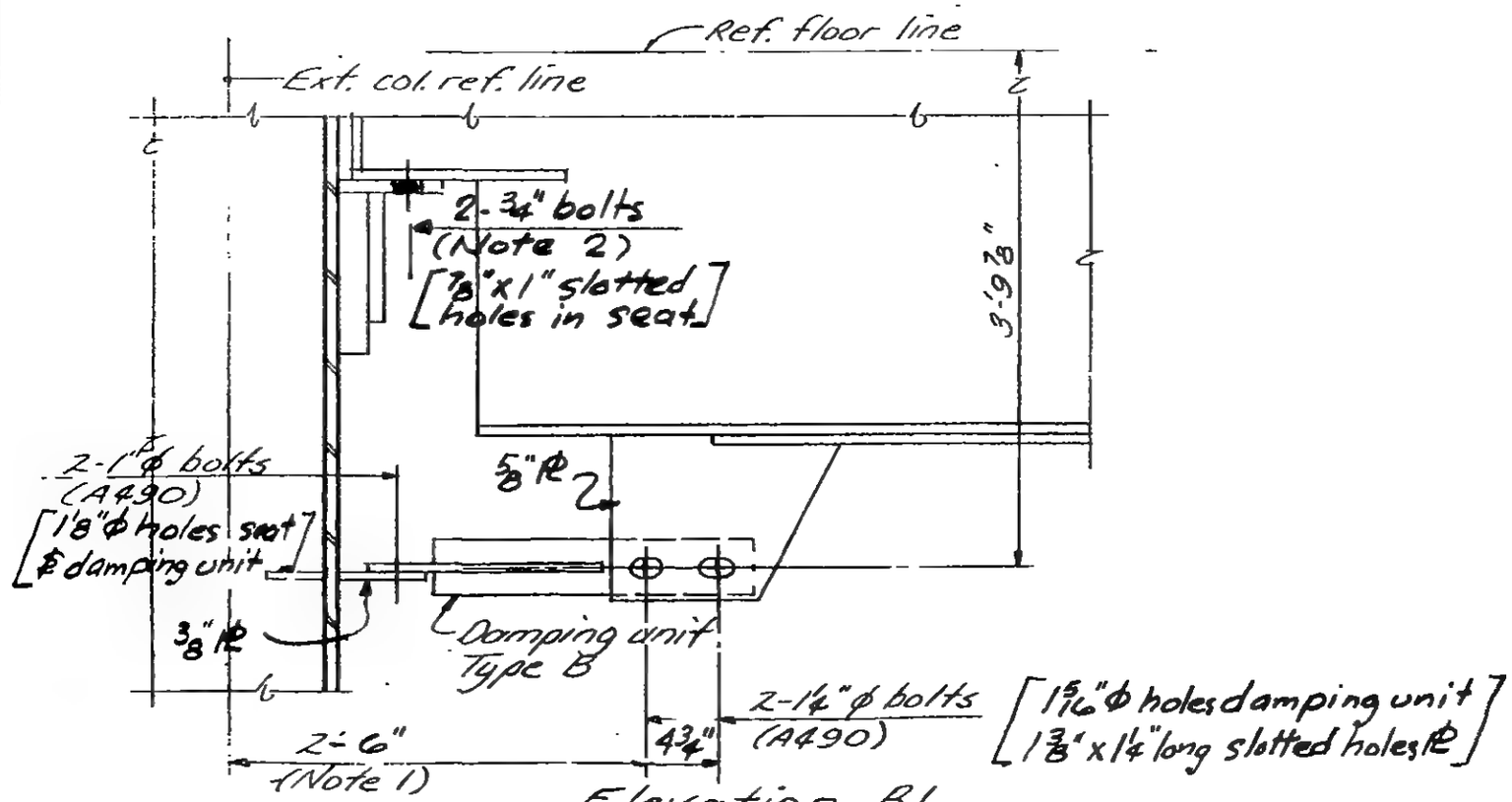

Elevation B1

DESIGNED S. Kaup
DRAWN J. Adams
REVIEWED W. Brewer

D-AB3-1

SKILLING, HELLE, CHRISTIANSEN, ROBERTSON — Structural & Civil Engineers

PROJECT: THE WORLD TRADE CENTER | TITLE: DETAIL B3 & B4 | DATE: 3/18/69

REVISIONS

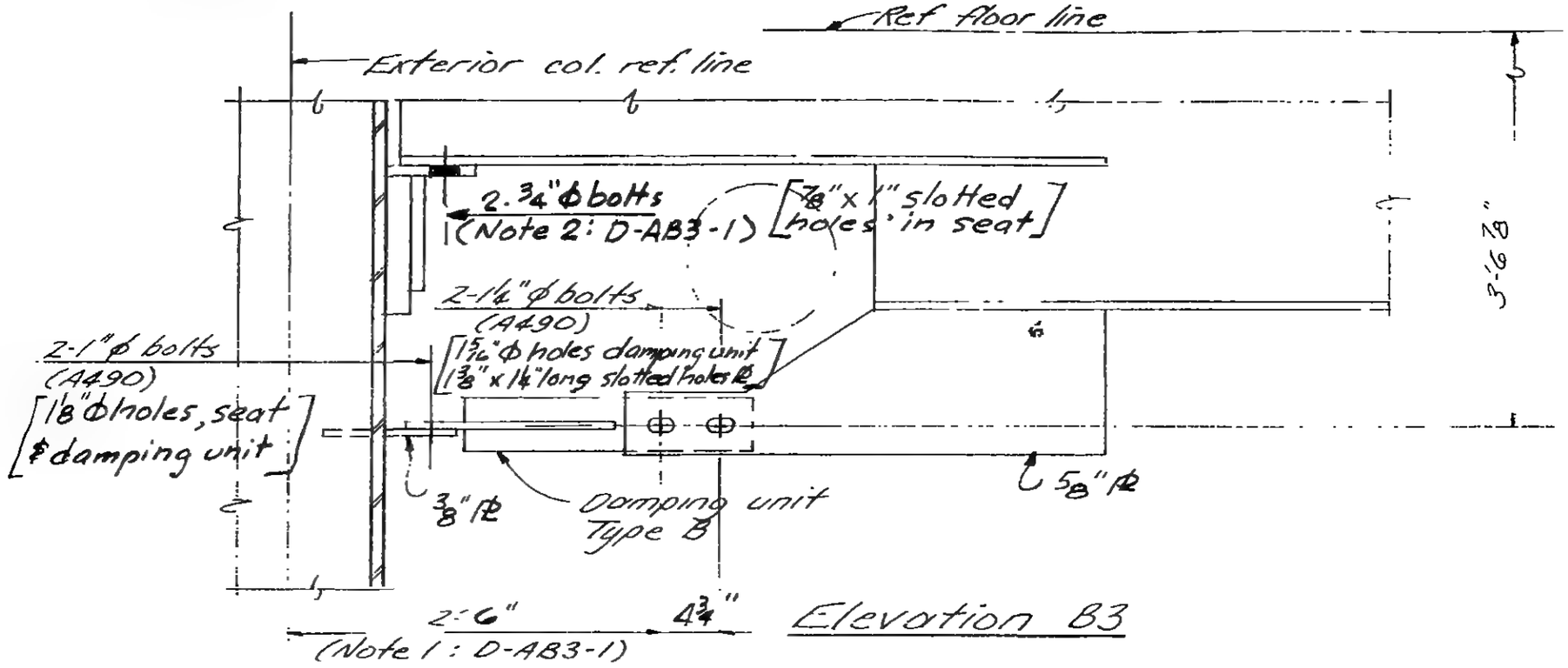

Elevation B3

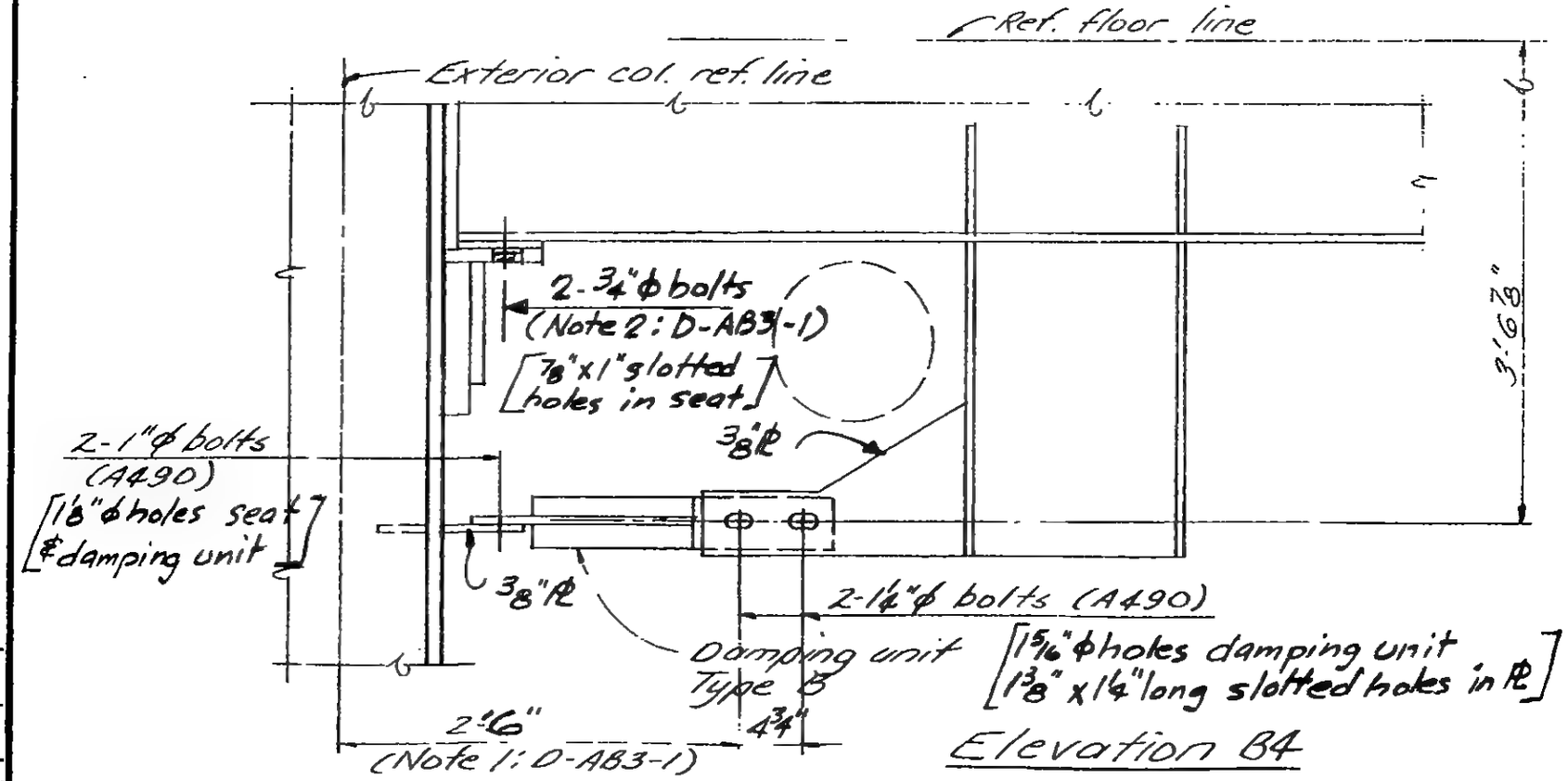

Elevation B4

DESIGNED S. Kaup
DRAWN J. Adams
REVIEWED W. Brewer

O-AB3-2

SKILLING, HELLE, CHRISTIANSEN, ROBERTSON — Structural & Civil Engineers

PROJECT: THE WORLD TRADE CENTER | TITLE: DETAIL B5 & B6 | DATE: 3/18/69

REVISIONS

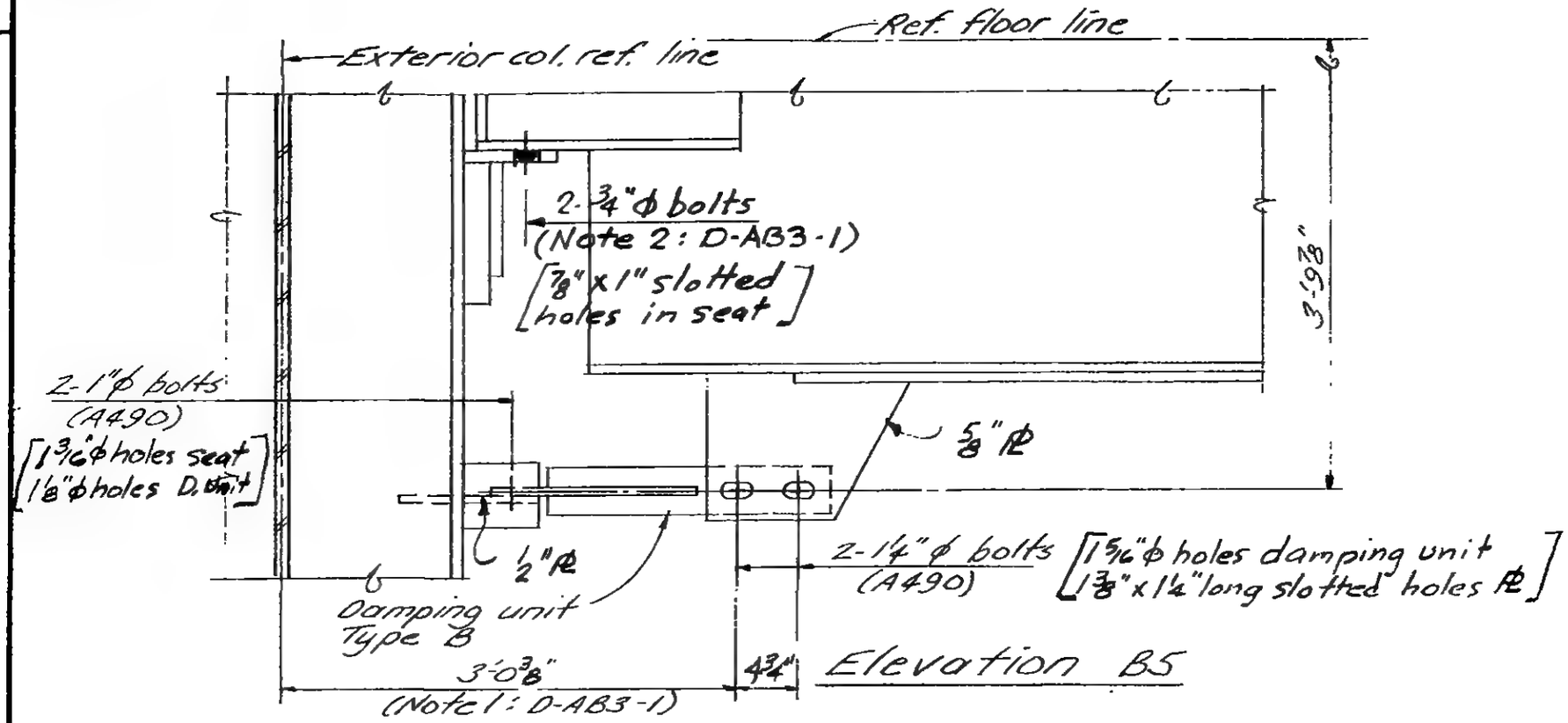

Elevation B5

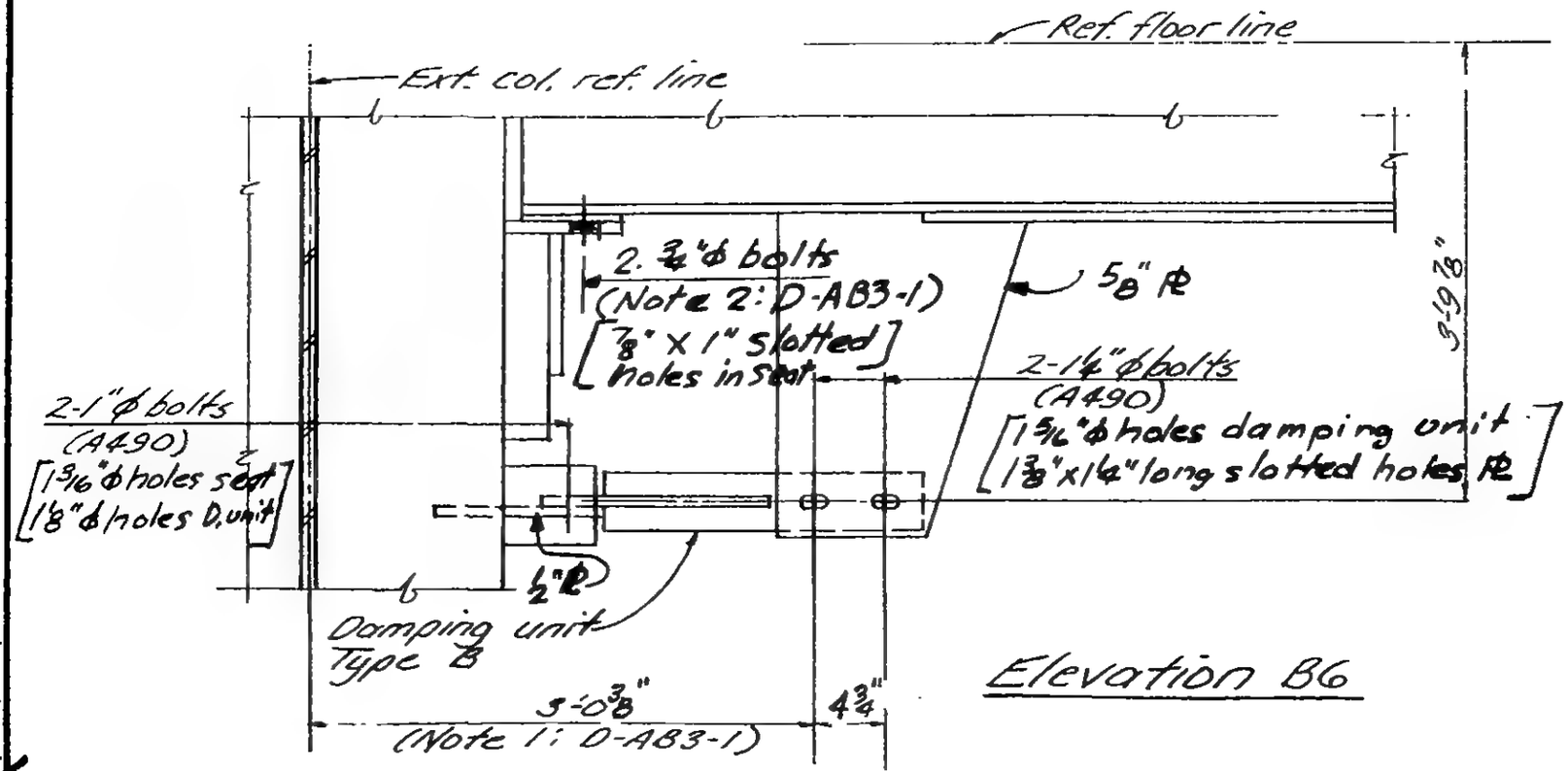

Elevation B6

DESIGNED: S. Karp
DRAWN: J Adams
REVIEWED: W. Brewer

D-AB3-3

SKILLING - HELLE - CHRISTIANSEN - ROBERTSON Structural & Civil Engineers

PROJECT THE WORLD TRADE CENTER | TITLE DAMPING UNIT - STRUCTURAL TEES | DATE 9-16-66

REVISIONS

12-13-67
4-15-68
6-20-68
5-20-69
8-29-69

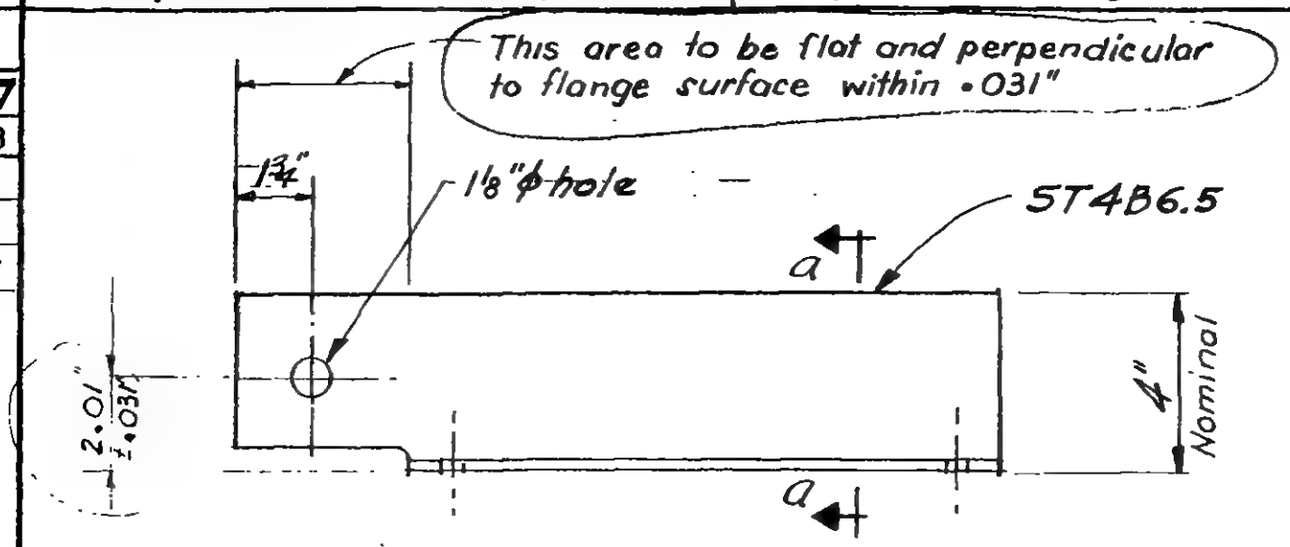

PLAN

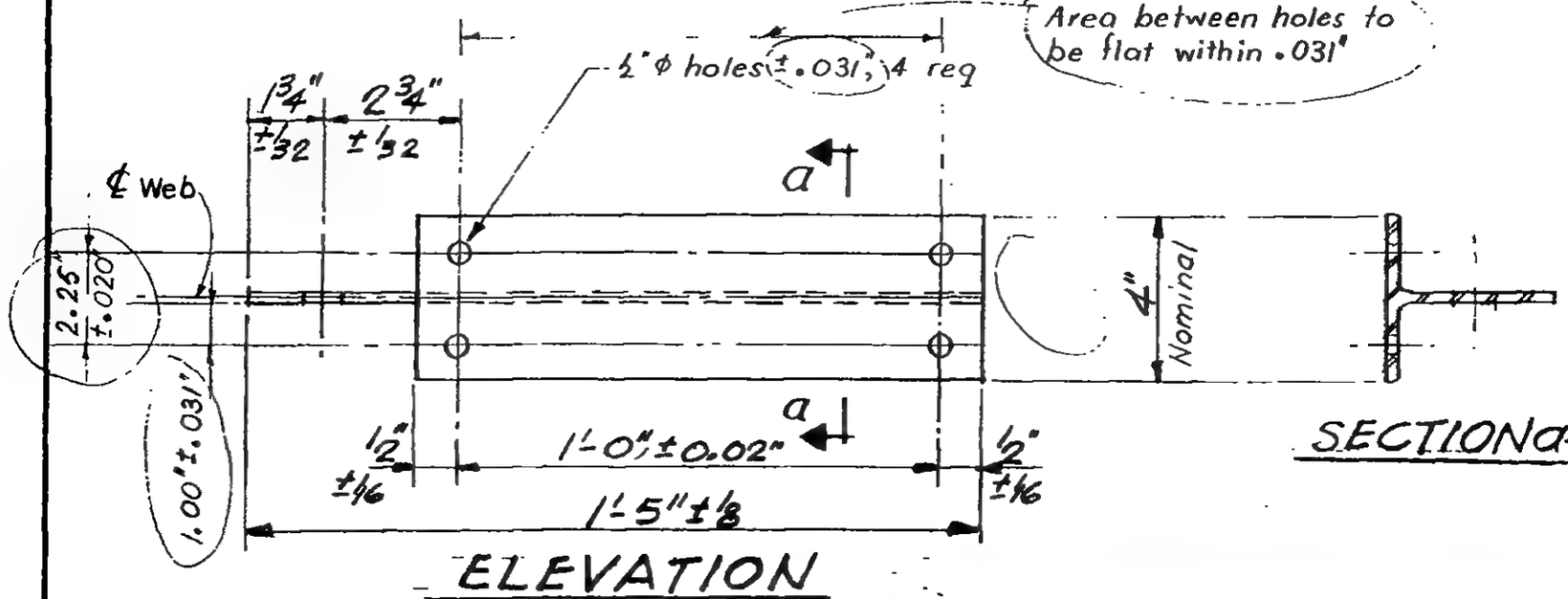

ELEVATION

SECTION a-a

SCHEDULE

TYPE	Nº REQ'D TOWER A	Nº REQ'D TOWER B	Nº REQ'D FOR ACCEPTABLE 1ST **	Nº REQ'D FOR GUARANTEE TEST	2 [redacted]	TOTAL * Nº REQ'D.
A	17,926	17,928	440	720	720	37,734
B	1,496	1,496	40	None	60	3,092

* The contractor of contract WTC 219.00 to supply the number of units indicated in this column.

** This is the minimum required for lots which are accepted after the first sample of each lot.

LICENSED PROFESSIONAL ENGINEER LESLIE E. ROBERTSON No. 34360 UNIVERSITY OF THE STATE OF NEW YORK

DA-1

SKILLING - HELLE - CHRISTIANSEN - ROBERTSON Structural & Civil Engineers

PROJECT THE WORLD TRADE CENTER | TITLE DAMPING UNIT - STRUCTURAL BARS | DATE 9-16-66

REVISIONS

12-13-67
4-15-68
6-20-68
5-20-69
8-29-69

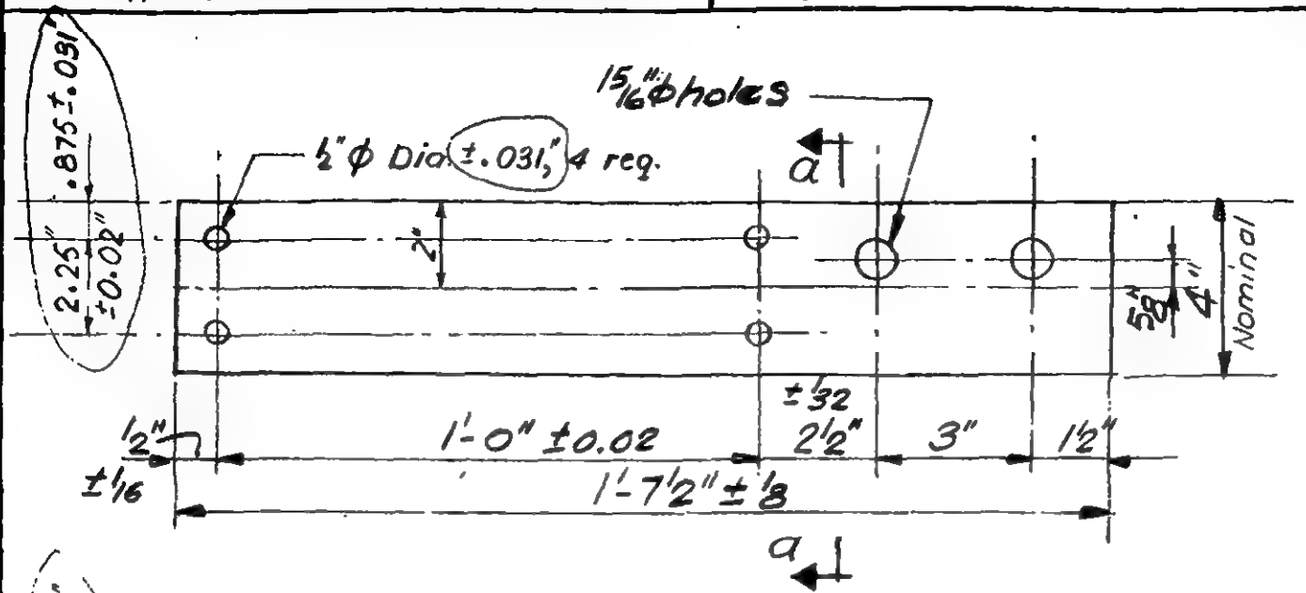

ELEVATION TYPE A

NOTE: Area between the ½" Diam. holes to be flat both sides within .031"

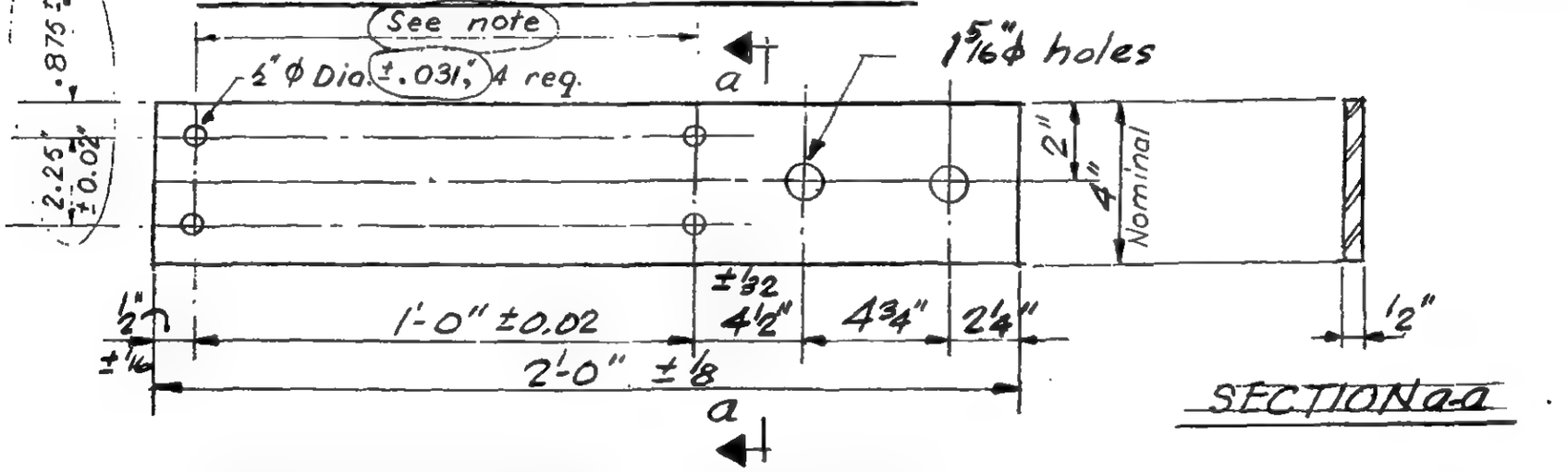

SECTION a-a

ELEVATION TYPE B

SCHEDULE

TYPE	Nº REQ'D TOWER A	Nº REQ'D TOWER B	Nº REQ'D FOR ACCEPTANCE TEST **	Nº REQ'D FOR GUARANTEE TEST	2 % OVER	TOTAL * Nº REQ'D.
A	8,963	8,964	220	360	360	18,867
B	748	748	20	None	30	1,546

* The Contractor of Contract 219.00 to supply the number of units indicated in this column.

** This is the minimum required for lots which are accepted after the first sample of each lot.

LICENSED PROFESSIONAL ENGINEER LESLIE E. ROBERTSON No. 34360 UNIVERSITY OF THE STATE OF NEW YORK

DA-2

SKILLING - HELLE - CHRISTIANSEN - ROBERTSON Structural & Civil Engineers

PROJECT THE WORLD TRADE CENTER | TITLE VISCOELASTIC DAMPING UNIT | DATE 10-27-67

REVISIONS

1-25-68
4-15-68
6-20-68
5-20-69
8-29-69
5-21-70

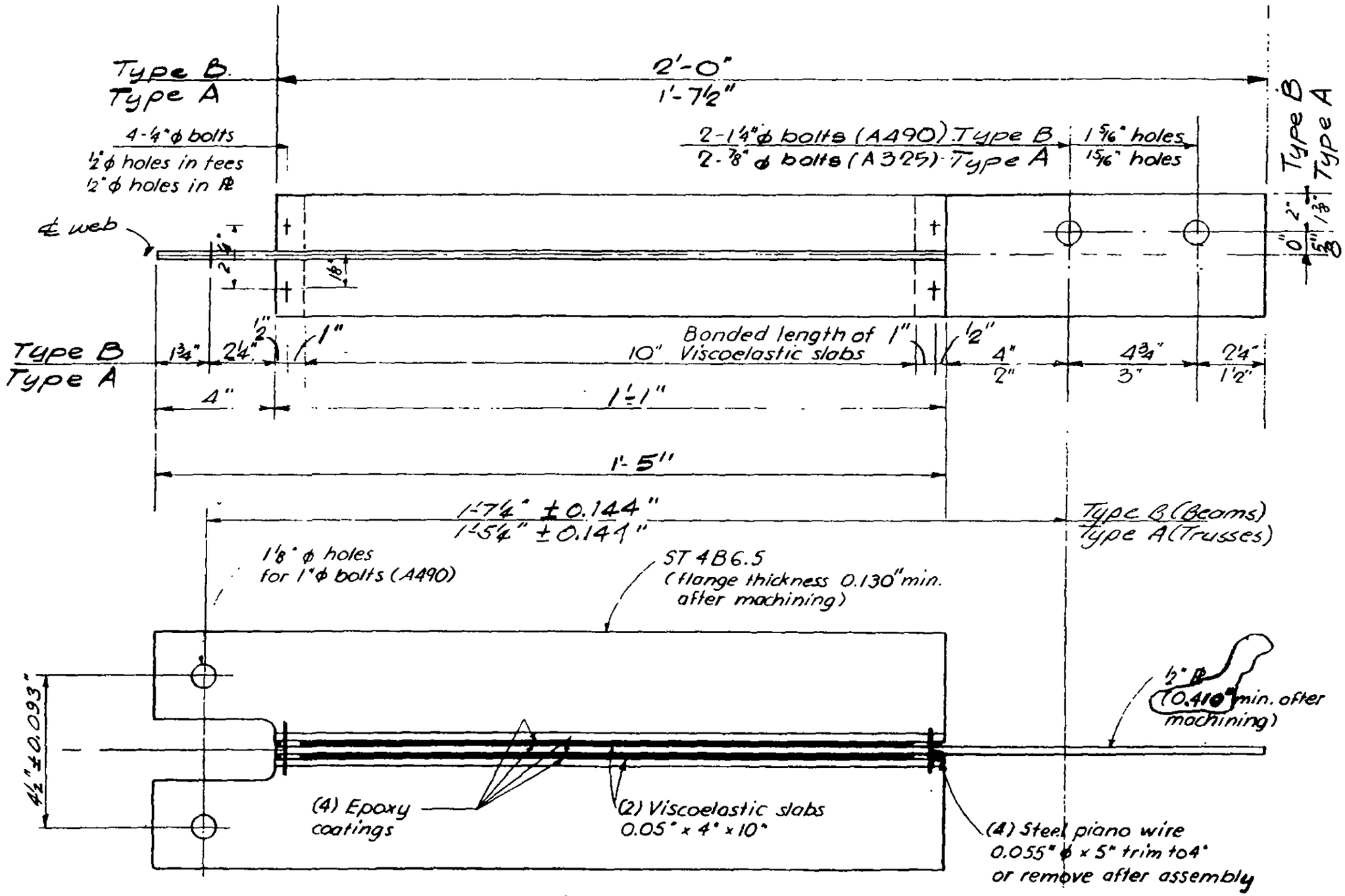

Type	NO REQ'D TOWER A	NO REQ'D TOWER B	APPROX. NO. REQ'D FOR ULTIMATE STRENGTH ACCEPTANCE TEST	NO REQ'D FOR 5-YEAR TEST	TOTAL NO REQ'D *
A	8963	8964	452	224	18,603
B	748	748	38	None	1,534

* The Contractor of Contract 224.00 to supply the number of units in this column.

LICENSED PROFESSIONAL ENGINEER — LESLIE E. ROBERTSON — NO. 34980 — UNIVERSITY OF THE STATE OF NEW YORK

DA-3

SKILLING, HELLE, CHRISTIANSEN, ROBERTSON — Structural & Civil Engineers

PROJECT: THE WORLD TRADE CENTER

TITLE: CORE TRUSS SEATS KEY PLAN

DATE: 3-18-69

REVISIONS

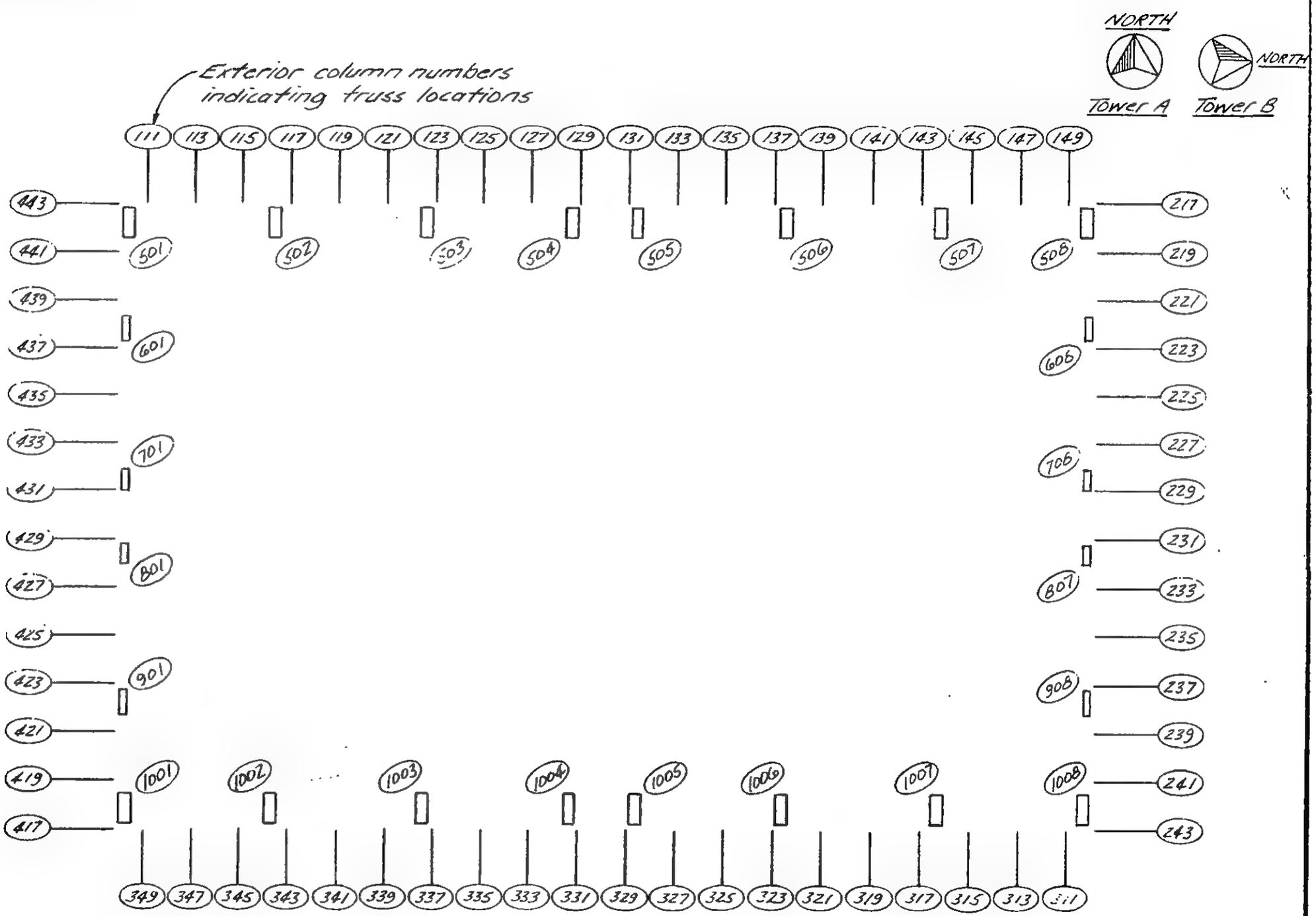

LICENSED PROFESSIONAL ENGINEER
LESLIE E. ROBERTSON
No. 34360
UNIVERSITY OF THE STATE OF NEW YORK

DESIGNED

DRAWN
J. Adams

REVIEWED
LE Brewer

O-AB4-1

REVISIONS

SKILLING, HELLE, CHRISTIANSEN, ROBERTSON — Structural & Civil Engineers

PROJECT: THE WORLD TRADE CENTER | TITLE: CORE TRUSS SEAT PLATE THICKNESS SCHEDULE | DATE: 3-18-69

Floor \ Exterior Col. No.	111	113	115	117	119	121	123	125	127	129	131	133	135	137	139	141	143	145	147	149
*10-40	5/8	5/8	1/2	1/2	1/2	1/2	1/2	1/2	1/2	1/2	1/2	1/2	1/2	1/2	1/2	1/2	1/2	1/2	5/8	5/8
44	3/4	3/4	5/8	5/8	5/8	5/8	-	-	-	-	-	-	-	-	5/8	5/8	5/8	5/8	3/4	3/4
45	5/8	5/8	1/2	1/2	1/2	1/2	-	-	-	-	-	-	-	-	1/2	1/2	1/2	1/2	5/8	5/8
46-74	5/8	5/8	1/2	1/2	1/2	1/2	1/2	1/2	1/2	1/2	1/2	1/2	1/2	1/2	1/2	1/2	1/2	1/2	5/8	5/8
78	3/4	3/4	5/8	5/8	5/8	5/8	5/8	5/8	5/8	5/8	5/8	5/8	5/8	5/8	5/8	5/8	5/8	5/8	3/4	3/4
79-82	5/8	5/8	1/2	1/2	1/2	1/2	1/2	1/2	1/2	1/2	1/2	1/2	1/2	1/2	1/2	1/2	1/2	1/2	5/8	5/8
83-91	1/2	1/2	1/2	1/2	7/16	7/16	7/16	7/16	7/16	7/16	7/16	7/16	7/16	7/16	7/16	7/16	1/2	1/2	1/2	1/2
92	1/2	1/2	1/2	1/2	7/16	7/16	7/16	7/16	7/16	7/16	7/16	7/16	7/16	7/16	7/16	7/16	7/16	7/16	7/16	3/4
93-106	1/2	1/2	1/2	1/2	7/16	7/16	7/16	7/16	7/16	7/16	7/16	7/16	7/16	7/16	7/16	7/16	1/2	1/2	1/2	1/2
10 Tower B	24WF142	21WF142	21WF142	21WF142	21WF68	21WF68	18WF114	18WF114	18WF114	21WF55	21WF55	21WF82	21WF82	21WF82	21WF82	21WF68	21WF112	21WF112	21WF112	21WF112
11 Tower B	24WF110	24WF110	24WF110	24WF110	24WF68	24WF68	30WF124	30WF124	30WF124	24WF68	24WF68	24WF76	24WF76	24WF76	24WF76	24WF68	24WF110	24WF110	24WF110	24WF110
12 Tower B	24WF120	24WF120	24WF120	24WF120	24WF68	24WF68	30WF124	30WF124	30WF124	24WF68	24WF68	24WF76	24WF76	24WF76	24WF76	24WF68	24WF110	24WF110	24WF110	24WF110

* 13-33 Tower B

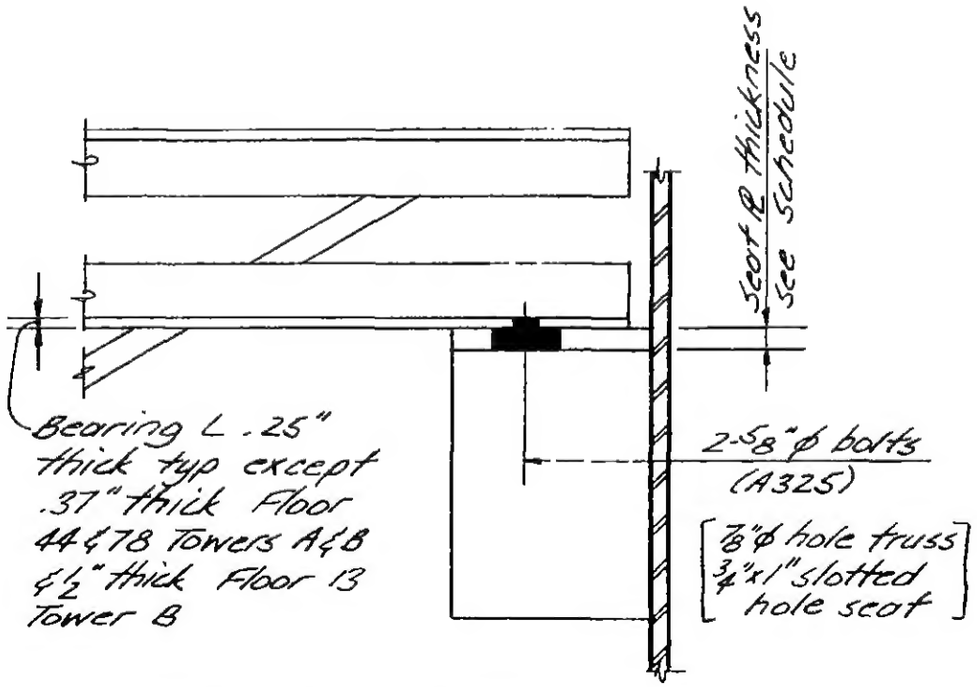

TYPICAL DETAIL
Floors 10-106 Tower A
Floors 13-106 Tower B

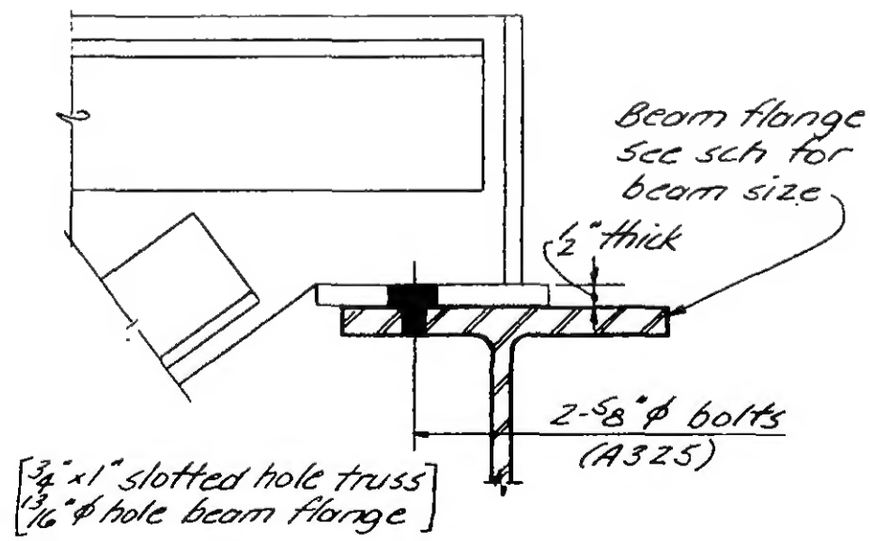

TYPICAL DETAIL
Floors 10, 11 & 12 Tower B

LICENSED PROFESSIONAL ENGINEER — LESLIE E. ROBERTSON — No. 34360 — UNIVERSITY OF THE STATE OF NEW YORK

DESIGNED

DRAWN J. Adams

REVIEWED W. Brewer

D-ABA-2

SKILLING, HELLE, CHRISTIANSEN, ROBERTSON — Structural & Civil Engineers

PROJECT: THE WORLD TRADE CENTER

TITLE: CORE TRUSS SEAT PLATE THICKNESS SCHEDULE

DATE: 3-18-69

REVISIONS

Floor \ Exterior Col. No.	217	219	221	223	225	227	229	231	233	235	237	239	241	243
*10-17	3/4	3/8	3/8	3/8	3/8	3/8	3/8	3/8	3/8	3/8	3/8	3/8	3/8	3/4
18	3/4	3/8	3/8	1/2	1/2	1/2	1/2	1/2	3/8	3/8	3/8	3/8	3/8	3/4
19-40	3/4	3/8	3/8	3/8	3/8	3/8	3/8	3/8	3/8	3/8	3/8	3/8	3/8	3/4
44-45	-	-	-	-	-	-	-	-	-	-	-	-	-	-
46	3/4	3/8	3/8	3/8	3/8	3/8	3/8	3/8	3/8	3/8	-	-	-	-
47	3/4	3/8	3/8	3/8	3/8	3/8	3/8	3/8	1/2	1/2	-	-	-	-
48-49	3/4	3/8	3/8	3/8	3/8	3/8	3/8	3/8	3/8	3/8	-	-	-	-
50-55	3/4	3/8	3/8	3/8	3/8	3/8	3/8	3/8	3/8	3/8	3/8	3/8	3/8	3/4
56	3/4	3/8	3/8	1/2	1/2	1/2	1/2	1/2	3/8	3/8	3/8	3/8	3/8	3/4
57-74	3/4	3/8	3/8	3/8	3/8	3/8	3/8	3/8	3/8	3/8	3/8	3/8	3/8	3/4
78-79	-	-	-	-	-	-	-	-	-	-	-	-	-	-
80	-	-	-	-	3/8	3/8	3/8	3/8	3/8	3/8	3/8	3/8	3/8	3/4
81	-	-	-	-	1/2	1/2	3/8	3/8	3/8	3/8	3/8	3/8	3/8	3/4
82-83	-	-	-	-	3/8	3/8	3/8	3/8	3/8	3/8	3/8	3/8	3/8	3/4
84-87	3/4	3/8	3/8	3/8	3/8	3/8	3/8	3/8	3/8	3/8	3/8	3/8	3/8	3/4
88	3/4	3/8	3/8	3/8	3/8	3/8	1/2	1/2	1/2	1/2	1/2	3/8	3/8	3/4
89-106	3/4	3/8	3/8	3/8	3/8	3/8	3/8	3/8	3/8	3/8	3/8	3/8	3/8	3/4

	217	219	221	223	225	227	229	231	232	233	234	235	237	239	241	243
10 Tower B	24I100	24I100	24I100	24I100	24I100	24I100	24I79.9	-	24I100	-	24I100	-	24I100	24I100	24I100	24I100
11 Tower B	24I79.9	24I79.9	24I79.9	24I79.9	24I79.9	24I79.9	24I79.9	24I79.9	-	24I79.9	-	24I79.9	24I79.9	24I79.9	24I79.9	24I79.9
12 Tower B	24I100	24I100	24I100	24I100	24I100	24I100	24I79.9	-	24I100	-	24I100	-	24I100	24I100	24I100	24I100

* 13 to 17 Tower B

See D-AB4-2 for typical details

LICENSED PROFESSIONAL ENGINEER — LESLIE E. ROBERTSON — No. 34360 — UNIVERSITY OF THE STATE OF NEW YORK

DESIGNED

DRAWN J. Adams

REVIEWED W. Brewer

D-AB4-3

REVISIONS

SKILLING, HELLE, CHRISTIANSEN, ROBERTSON — Structural & Civil Engineers

PROJECT THE WORLD TRADE CENTER | TITLE CORE TRUSS SEAT PLATE THICKNESS SCHEDULE | DATE 3-18-69

Floor \ Exterior col. No.	311	313	315	317	319	321	323	325	327	329	331	333	335	337	339	341	343	345	347	349
*10-40	5/8	5/8	1/2	1/2	1/2	1/2	1/2	1/2	1/2	1/2	1/2	1/2	1/2	1/2	1/2	1/2	1/2	1/2	5/8	5/8
44	3/4	3/4	5/8	5/8	5/8	5/8	5/8	5/8	5/8	5/8	5/8	5/8	5/8	5/8	5/8	5/8	5/8	5/8	3/4	3/4
45-48	5/8	5/8	1/2	1/2	1/2	1/2	1/2	1/2	1/2	1/2	1/2	1/2	1/2	1/2	1/2	1/2	1/2	1/2	5/8	5/8
49-58	1/2	1/2	1/2	1/2	7/16	7/16	7/16	7/16	7/16	7/16	7/16	7/16	7/16	7/16	7/16	7/16	1/2	1/2	1/2	1/2
59	1/2	1/2	1/2	1/2	7/16	7/16	7/16	7/16	7/16	7/16	7/16	7/16	7/16	7/16	7/16	7/16	7/16	7/16	7/16	3/4
60-74	1/2	1/2	1/2	1/2	7/16	7/16	7/16	7/16	7/16	7/16	7/16	7/16	7/16	7/16	7/16	7/16	1/2	1/2	1/2	1/2
78	3/4	3/4	5/8	5/8	5/8	5/8	5/8	5/8	5/8	5/8	5/8	5/8	5/8	5/8	5/8	5/8	5/8	5/8	3/4	3/4
79-91	1/2	1/2	1/2	1/2	7/16	7/16	7/16	7/16	7/16	7/16	7/16	7/16	7/16	7/16	7/16	7/16	1/2	1/2	1/2	1/2
92	1/2	1/2	1/2	1/2	7/16	7/16	7/16	7/16	7/16	7/16	7/16	7/16	7/16	7/16	7/16	7/16	7/16	7/16	7/16	3/4
93-106	1/2	1/2	1/2	1/2	7/16	7/16	7/16	7/16	7/16	7/16	7/16	7/16	7/16	7/16	7/16	7/16	1/2	1/2	1/2	1/2
10 Tower B	21WF112	21WF112	21WF112	21WF112	21WF68	21WF68	18WF114	18WF114	18WF114	21WF55	21WF55	21WF82	21WF82	21WF82	21WF82	21WF68	21WF142	21WF142	21WF142	21WF142
11 Tower B	24WF110	24WF110	24WF110	24WF110	24WF68	24WF68	30WF124	30WF124	30WF124	24WF68	24WF68	24WF76	24WF76	24WF76	24WF76	24WF68	24WF145	24WF145	24WF145	24WF145
12 Tower B	24WF110	24WF110	24WF110	24WF110	24WF68	24WF68	30WF124	30WF124	30WF124	24WF68	24WF68	24WF76	24WF76	24WF76	24WF76	24WF68	24WF120	24WF120	24WF120	24WF120

* 13-40 Tower B

see O-AB4-2 for typical details.

LICENSED PROFESSIONAL ENGINEER
LESLIE E. ROBERTSON
No. 34360
UNIVERSITY OF THE STATE OF NEW YORK

DESIGNED

DRAWN
J. Adams

REVIEWED
W Brewer

O-AB4-4

SKILLING, HELLE, CHRISTIANSEN, ROBERTSON — Structural & Civil Engineers

PROJECT: THE WORLD TRADE CENTER

TITLE: CORE TRUSS SEAT PLATE THICKNESS SCHEDULE

DATE: 3-18-69

REVISIONS

Floor \ Exterior Col. No.	417	419	421	423	425	427	429	431	433	435	437	439	441	443
*10-33	3/4	3/8	3/8	3/8	3/8	3/8	3/8	3/8	3/8	3/8	3/8	3/8	3/8	3/4
34	3/4	3/8	3/8	3/8	3/8	3/8	1/2	1/2	1/2	1/2	1/2	3/8	3/8	3/4
35-40	3/4	3/8	3/8	3/8	3/8	3/8	3/8	3/8	3/8	3/8	3/8	3/8	3/8	3/4
44	–	–	–	–	–	–	–	–	–	–	–	–	–	–
45-46	–	–	–	–	3/8	3/8	3/8	3/8	3/8	3/8	3/8	3/8	3/8	3/4
47	–	–	–	–	1/2	1/2	3/8	3/8	3/8	3/8	3/8	3/8	3/8	3/4
48-49	–	–	–	–	3/8	3/8	3/8	3/8	3/8	3/8	3/8	3/8	3/8	3/4
50-68	3/4	3/8	3/8	3/8	3/8	3/8	3/8	3/8	3/8	3/8	3/8	3/8	3/8	3/4
69	3/4	3/8	3/8	3/8	3/8	3/8	1/2	1/2	1/2	1/2	1/2	3/8	3/8	3/4
70-74	3/4	3/8	3/8	3/8	3/8	3/8	3/8	3/8	3/8	3/8	3/8	3/8	3/8	3/4
78	–	–	–	–	–	–	–	–	–	–	–	–	–	–
79-80	3/4	3/8	3/8	3/8	3/8	3/8	3/8	3/8	3/8	3/8	–	–	–	–
81	3/4	3/8	3/8	3/8	3/8	3/8	3/8	3/8	1/2	1/2	–	–	–	–
82-83	3/4	3/8	3/8	3/8	3/8	3/8	3/8	3/8	3/8	3/8	–	–	–	–
84-94	3/4	3/8	3/8	3/8	3/8	3/8	3/8	3/8	3/8	3/8	3/8	3/8	3/8	3/4
95	3/4	3/8	3/8	1/2	1/2	1/2	1/2	1/2	3/8	3/8	3/8	3/8	3/8	3/4
96-106	3/4	3/8	3/8	3/8	3/8	3/8	3/8	3/8	3/8	3/8	3/8	3/8	3/8	3/4
10 Tower B	24I100	24I100	24I100	24I100	24I100	24I100	24I79.9	24I79.9	24I100	24I100	24I100	24I100	24I100	24I100
11 Tower B	24I79.9	24I79.9	24I79.9	24I79.9	24I79.9	24I79.9	24I79.9	24I79.9	24I79.9	24I79.9	24I79.9	24I79.9	24I79.9	24I79.9
12 Tower B	24I100	24I100	24I100	24I100	24I100	24I100	24I79.9	24I79.9	24I100	24I100	24I100	24I100	24I100	24I100

* 13-33 Tower B

See O-AB4-2 for typical details

LICENSED PROFESSIONAL ENGINEER
LESLIE E. ROBERTSON
No. 34360
UNIVERSITY OF THE STATE OF NEW YORK

DESIGNED

DRAWN J. Adams

REVIEWED W. Brewer

O-AB4-5